ORDER NO. MD0504151C3

Service Manual

DVD Stereo System

SA-PM91DGN

Colour

(S) ... Silver Type

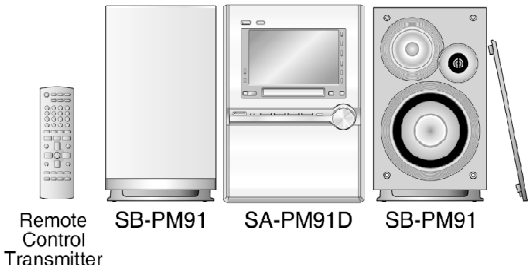

SPECIFICATIONS

Specification

■ **Amplifier Section**

RMS Output Power Stereo mode (Both channel driven)	
10% total harmonic distortion	
1 kHz, (Low channel)	40 W per channel (6 Ω)
8 kHz, (High channel)	40 W per channel (6 Ω)
Total RMS Stereo mode power	160 W
DIN Output Power Stereo mode (Both channel driven)	
10% total harmonic distortion	
1 kHz, (Low channel)	35 W per channel (6 Ω)
8 kHz, (High channel)	35 W per channel (6 Ω)
Total RMS Stereo mode power	140 W per channel
Phone jack terminal	Stereo, 3.5 mm jack

■ **Disc Section**

Disc played [8cm or 12 cm]

1. DVD-RAM (DVD-VR compatible, JPEG formatted disc)
2. DVD-Audio
3. DVD-Video
4. DVD-R (DVD-Video compatible)
5. DVD-RW, +R, +RW
6. CD-Audio (CD-DA)
7. Video CD
8. SVCD (Conforming to IEC62107)
9. CD-R/CD-RW
   (CD-DA, Video-CD, SVCD, MP3, WMA, JPEG formatted discs)
10. MP3/WMA*
    -Compatible compression rates:
    MP3: between 32 kbps and 320 kbps
    WMA: between 48 kbps and 320 kbps
11. JPEG*
    -Exif Ver 2.1 JPEG Baseline files
    -Picture resolution:
    between 320 x 240 and 6144 x 4096 pixels
    (Sub sampling is 4:2:2 or 4:2:0)
12. HighMAT Level 2 (Audio and Image)
13. HDCD

* The total combined maximum number of recognizable audio and picture contents and groups: 4000 audio and picture contents and 400 groups.

Audio output	
Number of channels	2
Digital audio output	
Optical digital output	Optical terminal
Pick up	
Wavelength	
DVD	662 nm
CD	785 nm
Laser power	CLASS 2/CLASS 3a

■ **Video Section**

Video system	PAL625/50, PAL525/60, NTSC
Composite video output	

Output level	1 Vp-p (75 Ω)
Terminal	Pin jack (1 system)
S-Video output	
Y output level	1 Vp-p (75 Ω)
C output level	0.3 Vp-p (75 Ω) (PAL) 0.286 Vp-p (75 Ω) (NTSC)
Terminal	S terminal (1 system)
Component video output (480P/ 480I)	
Y output level	1 Vp-p (75 Ω)
PB output level	0.7 Vp-p (75 Ω)
PR output level	0.7 Vp-p (75 Ω)
Terminal	Pin jack (Y: green, PB: blue, PR: red) (1 system)

■ Cassette Deck Section

Track system	4-track, 2-channel
Heads	
Record/playback	Solid permalloy head
Erasure	Double gap ferrite head
Motor	DC servo motor
Recording system	AC bias 100 kHz AC erase 100 kHz
Tape speed	4.8 cm/sec
Overall frequency response (+3, -6 dB) at Deck Out	
Normal	35 Hz - 14 kHz
S/N ratio	50 dB (A weighted)
Wow and flutter	0.18% (WRMS)
Fast forward and rewind time	Approx. 120 seconds with C-60 cassette tape

■ FM Tuner Section

Frequency range	87.50 - 108.00 MHz / (50 kHz step)
Sensitivity	1.6 μ V (IHF)
S/N 26 dB	1.5 μ V
Antenna terminals	75 Ω (unbalance)
Preset stations	15

■ AM Tuner Section

Frequency range	522 - 1629 kHz (9 kHz steps)
Sensitivity	
S/N 20 dB at 999 kHz	560 μ V/m
Image rejection at 999 kHz	40 dB
Preset stations	15

■ General

Power supply	AC 230-240 V, 50 Hz
Power consumption	140 W
Dimensions (W x H x D)	175 mm x 248 mm x 388 mm
Mass	5.8 kg

Mass	5.5 kg
Operating temperature range	+ 5°C to + 35°C / (+ 41°F to + 95°F)
Operating humidity range	5% to 90% RH (no condensation)
Power consumption in standby mode	0.5 W

■ System

■ System: SC-PM91DGN-S	Music Center: SA-PM91DGN-S Speaker: SB-PM91P-MJ

Notes :

1. Specifications are subject to change without notice. / Mass and dimensions are approximate.
2. Total harmonic distortion is measured by the digital spectrum analyzer.

© 2005 Matsushita Electric Industrial Co. Ltd.. All rights reserved. Unauthorized copying and distribution is a violation of law.

This service i
It does not co
Products pow
or repair the

Panasonic

1. Safety Precautions

1.1. GENERAL GUIDELINES

1. When servicing, observe the original lead dress. If a short circuit is found, replace all parts which have been overheated or damaged by the short circuit.
2. After servicing, ensure that all the protective devices such as insulation barriers, insulation papers shields are properly installed.
3. After servicing, check for leakage current checks to prevent from being exposed to shock hazards.

1.1.1. LEAKAGE CURRENT COLD CHECK

1. Unplug the AC cord and connect a jumper between the two prongs on the plug.
2. Using an ohmmeter measure the resistance value, between the jumpered AC plug and each exposed metallic cabinet part on the

equipment such as screwheads, connectors, control shafts, etc. When the exposed metallic part has a return path to the chassis, the reading should be between 1M Ω and 5.2 Ω . / When the exposed metal does not have a return path to the chassis, the reading must be ∞ .

Fig. 1

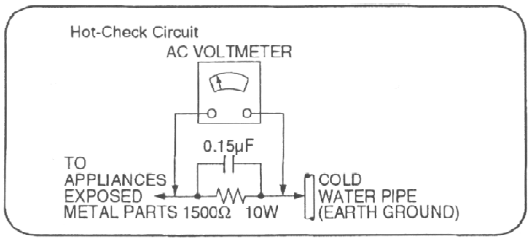

1.1.2. LEAKAGE CURRENT HOT CHECK (See Figure 1.)

1. Plug the AC cord directly into the AC outlet. Do not use an isolation transformer for this check.
2. Connect a 1.5k Ω , 10 watts resistor, in parallel with a 0.15 μ F capacitors, between each exposed metallic part on the set and a good earth ground such as a water pipe, as shown in Figure 1.
3. Use an AC voltmeter, with 1000 ohms/volt or more sensitivity, to measure the potential across the resistor.
4. Check each exposed metallic part, and measure the voltage at each point.
5. Reverse the AC plug in the AC outlet and repeat each of the above measurements.
6. The potential at any point should not exceed 0.75 volts RMS. A leakage current tester (Simpson Model 229 or equivalent) may be used to make the hot checks, leakage current must not exceed 1/2 milliamp. should the measurement is outside of the limits specified, there is a possibility of a shock hazard, and the equipment should be repaired and re-checked before it is returned to the customer.

2. Before Repair and Adjustment

Disconnect AC power, discharge Power Supply Capacitors C5802, C5803, C5804, C5912, C5902, C5901, C5916, C5915, C5905, C5904, C2843 and C2824 through a 10 Ω , 1 W resistor to ground. DO NOT SHORT-CIRCUIT DIRECTLY (with a screwdriver blade, for instance), as this may

destroy solid state devices.
After repairs are completed, restore power gradually using a variac, to avoid overcurrent.

- Current consumption at AC 230-240 V, 50 Hz in NO SIGNAL mode (volume min) should be ~300 mA.

3. Protection Circuitry

The protection circuitry may have operated if either of the following conditions are noticed:

- No sound is heard when the power is turned on.

- Sound stops during a performance.

The function of this circuitry is to prevent circuitry damage if, for example, the positive and negative speaker connection wires are
"shorted", or if speaker systems with an impedance less than the indicated rated impedance of the amplifier are used.
If this occurs, follow the procedure outlines below:

1. **Turn off the power.**
2. **Determine the cause of the problem and correct it.**
3. **Turn on the power once again after one minute.**

Note :
When the protection circuitry functions, the unit will not operate unless the power is first turned off and then on again.

4. Prevention of Electro Static Discharge (ESD) to Electrostatically Sensitive (ES) Devices

Some semiconductor (solid state) devices can be damaged easily by electricity. Such components commonly are called Electrostatically Sensitive (ES) Devices. Examples of typical ES devices are integrated circuits and some field-effect transistors and semiconductor "chip" components. The following techniques should be used to help reduce the incidence of component damage caused by electro static discharge (ESD).

1. **Immediately before handling any semiconductor component or semiconductor-equiped assembly, drain off any ESD on your body by touching a known earth ground. Alternatively, obtain and wear a commercially available discharging ESD wrist strap, which should be removed for potential shock reasons prior to applying power to the unit under test.**
2. **After removing an electrical assembly equiped with ES devices, place the assembly on a conductive surface such as aluminium foil, to prevent electrostatic charge build up or exposure of the assembly.**
3. **Use only a grounded-tip soldering iron to solder or unsolder ES devices.**

4. **Use only an anti-static solder remover device. Some solder removal devices not classified as “anti-static (ESD protected)” can generate electrical charge to damage ES devices.**
5. **Do not use freon-propelled chemicals. These can generate electrical charges sufficient to damage ES devices.**
6. **Do not remove a replacement ES device from its protective package until immediately before you are ready to install it. (Most replacement ES devices are packaged with leads electrically shorted together by conductive foam, aluminium foil or comparable conductive material).**
7. **Immediately before removing the protective material from the leads of a replacement ES device, touch the protective material to the chassis or circuit assembly into which the device will be installed.**

   Caution

   Be sure no power is applied to the chassis or circuit, and observe all other safety precautions.
8. **Minimize body motions when handling unpackaged replacement ES devices. (Otherwise harmless motion such as the brushing together of your clothes fabric or the lifting of your foot from a carpeted floor can generate static electricity (ESD) sufficient to damage an ES device).**

IMPORTANT SAFETY NOTICE

There are special components used in this equipment which are imporant for safety.
These parts are marked by ⚠ in the schematic diagrams, Exploded Views and replacement parts list. It is essential that these critical parts should be replaced with manufacturer's specified parts to prevent shock, fire, or other hazards. Do not modify the original design without permission of manufacturer.

5. Handling the Lead-free Solder

5.1. About lead free solder (PbF)

Distinction of PbF P.C.B.:

P.C.B.s (manufactured) using lead free solder will have a PbF stamp on the P.C.B.

Caution:

- **Pb free solder has a higher melting point than standard solder; Typically the melting point is 50 - 70°F (30 - 40°C) higher. Please use a high temperature soldering iron. In case of soldering iron with temperature control, please set it to 700 ± 20°F (370 ± 10°C).**

- Pb free solder will tend to splash when heated too high (about 1100°F/600°C).
- When soldering or unsoldering, please completely remove all of the solder on the pins or solder area, and be sure to heat the soldering points with the Pb free solder until it melts enough.

6. Precaution of Laser Diode

CAUTION:

This unit utilizes a class 1 laser.
Invisible laser radiation is emitted from the optical pickup lens.
When the unit is turned on:

1. Do not look directly into the pick up lens.
2. Do not use optical instruments to look at the pick up lens.
3. Do not adjust the preset variable resistor on the pickup lens.
4. Do not disassemble the optical pick up unit.
5. If the optical pick up is replaced, use the manufacturer's specified replacement pick up only.
6. Use of control or adjustments or performance of procedures other than those specified herein may result in hazardous radiation exposure.

CAUTION!

THIS PRODUCT UTILIZES A LASER.
USE OF CONTROLS OR ADJUSTMENTS OR PERFORMANCE OF PROCEDURES OTHER THAN TH
SPECIFIED HEREIN MAY RESULT IN HAZARDOUS RADIATION EXPOSURE.

■ **Use of Caution Labels**

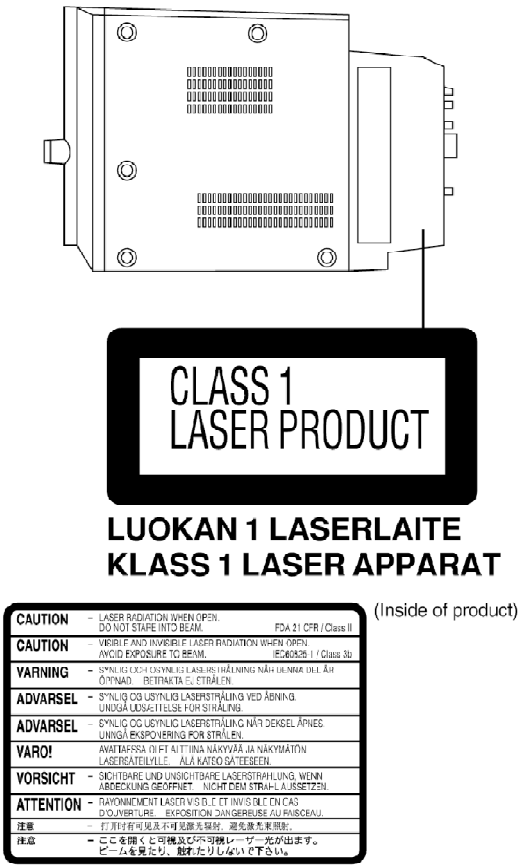

7. Cautions to be taken when handling Optical Pickup

The laser diode used inside optical pickup could be destroyed due to static electricity as a potential difference is caused by electrostatic load discharged from clothes or human body. Handling the parts carefully to avoid electrostatic destruction during repair.

7.1. Handling Optical Pickup

1. **Do not impact on optical pickup as the unit structurally uses an extremely precise technology.**
2. **Short-circuit the flexible cable of optical pickup remove from the circuit board using a short-circuit pin or clip in order to prevent laser diode from electrostatic destruction (Refer to Fig. 7.1 and Fig. 7.2)**
3. **Do not handle flexible cables forcibly as this may cause snapping. Handle the parts carefully (Refer to Fig. 7.1)**
4. **A new optical pickup is equipped with an anti-static flexible cable. After replacing and connecting to the flexible board, cut the anti-static flexible cable. (Refer to Fig. 7.1)**

Fig. 7.1

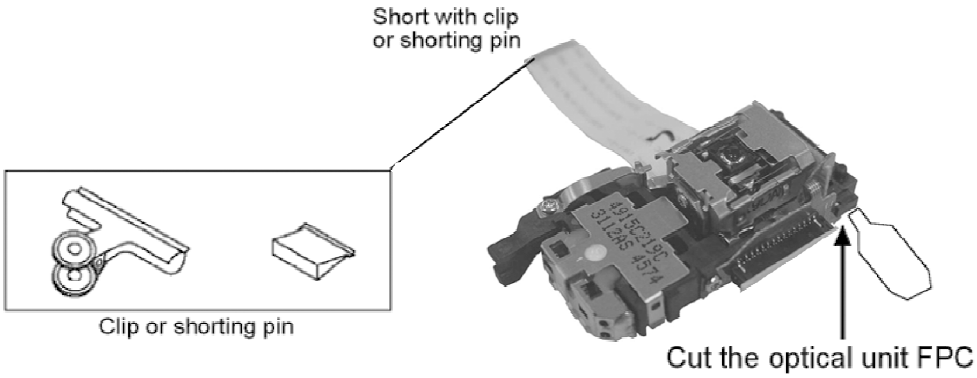

7.2. Replacing Precautions for Optical Pickup Unit

DVD/CD Optical Pickup

The optical pickup by which part supply was carried out attaches the short clip to the flexible board for laser diode electrostatic discharge damage prevention. Please remove the short clip and be sure to check that the short land is open, before connecting. (Please remove solder, when the short land short-circuits.)

7.3. Grounding for Preventing Electrostatic Destruction

1. Human body grounding

Use the anti-static wrist strap to discharge the static electricity accumulated in your body. (Refer to Fig. 7.2)

2. Work place grounding

Place a conductive material (conductive sheet) or ironboard where optical pickup is placed. (Refer to Fig. 7.2)

Note :

Keep your clothes away from optical pickup as wrist strap does not release the static electricity charged in clothes.

Fig. 7.2

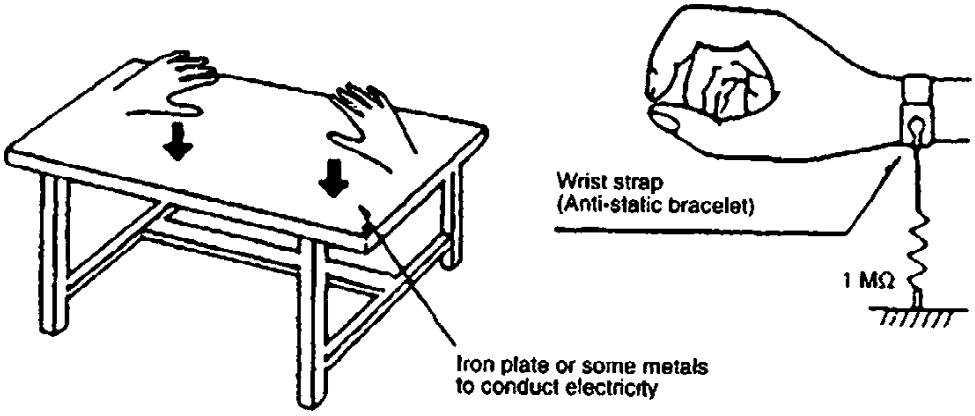

8. Accessories

Note : Refer to Packaging Materials & Accessories Part List (Section 26.5) for part number.

Remote Control

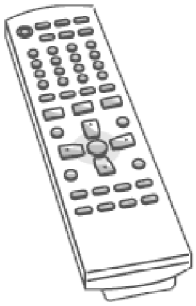

AC Cord

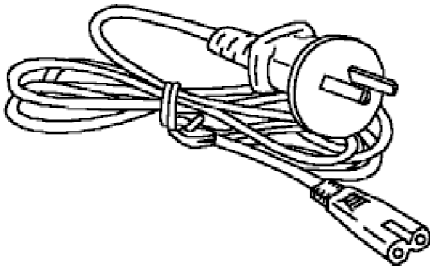

FM Indoor Antenna

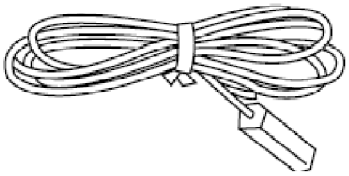

AM Loop Antenna

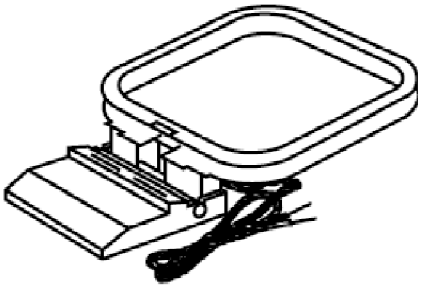

Video Cable

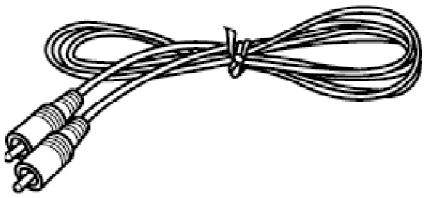

9. Operation Procedures

10. Disc Information

11. About HighMAT

11.1. What's HighMAT?

Consumers worldwide are using PCs to create their own collections of music, photos and even video by burning them onto CDs. But how these collections can be experienced across different devices can be confusing to navigate, time consuming to access for a DVD player, and be incomplete in terms of music information available to the customer.
HighMAT offers a solution to this growing consumer problem. HighMAT dramatically improves the digital media experience on consumer electronic devices by delivering a simple, standardized approach that allows consumers who have created personal collections of digital music, photography and video on their PC to:

- **Create a HighMAT CD or DVD which can be easily played back on consumer electronics devices such as CD and DVD players, and car stereos.**
- **Move digital media files (using recordable media such as CD-R and CD-RW) between the PC and various playback devices such as CD and DVD players.**

A new standard for creating personal media on consumer electronic devices, HighMAT enable easier and more seamless interoperability between Windows PCs and devices designed for your living room, or the car.

HIGH M·A·T™

HighMAT is a new technology which has been co-developed and is supported by Microsoft Corporation and Matsushita Electric Industrial Co., Ltd. (Panasonic). HighMAT stands for High-Performance Media Access Technology. Look for the HighMAT logo on electronics devices - there are three levels of playback support for consumer electronics devices.

▶ HighMAT Official Website

HIGH M·A·T AUDIO

HighMAT Audio

Products which display this logo are able to play back HighMAT audio content only (WMA, MP3)

HIGH M·A·T AUDIO·IMAGE

HighMAT Audio and Image

Products which display this logo are able to play back HighMAT audio content (WMA, MP3) and still pictures (JPEG) only

HIGH M·A·T AUDIO·IMAGE VIDEO

HighMAT Audio, Image and Video

Products which display this logo are able to play back all three types of HighMAT content: Audio (WMA, MP3), still pictures (JPEG) and video (WMV, MPEG-4※)

※MPEG-4: support is optional

11.2. Why take advantage of HighMAT?

A Problem Defined:Today, when consumers create their own digital audio, video or photo collections on CD-R or other physical formats, there are numerous, inconsistent ways that devices read the data. For the consumer, the playback experience can be confusing:

- Many consumer electronics devices do not support playlists or advanced playback options such as the ability to access content by date or genre.
- The user interface for accessing the media and any associated information (including playlists, folders, music metadata and more) may vary between different devices.
- Large collections of music, videos or photos may take several minutes for a CD or DVD player to read.
- Discs may be unplayable because the compressed media format is not supported by the playback device or the disc layout is incompatible.

A Solution Created: HighMAT delivers a better digital media access experience by creating a standard approach for PCs to structure digital media on various physical formats and for playback devices to read the data.

11.3. Benefits of HighMAT?

1 Creating a HighMAT CD makes it easier to navigate different types of media you want to burn onto a CD (Photos, Music).

Conventional	HighMAT
Even though DVD player is CD-R/RW compatible, the inconsistent ways that various DVD players can read the music or photos files often leads to a confusing and inconsistant playback experince.	**HighMAT compatible products play content with consistent interface. This includes pro which are JPEG compatible products witho HighMAT support.**
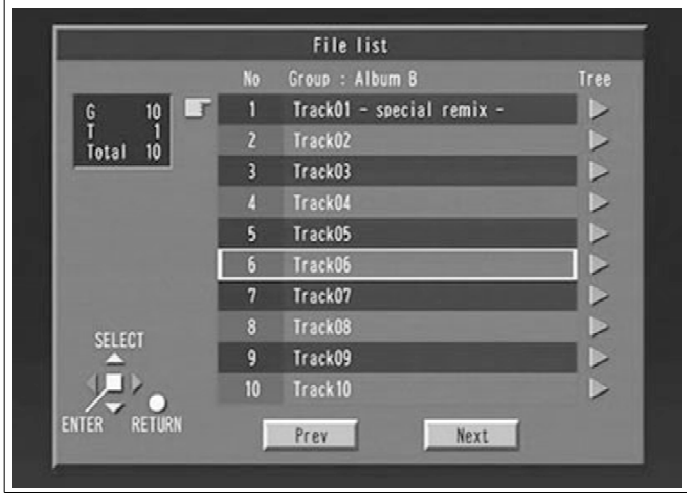	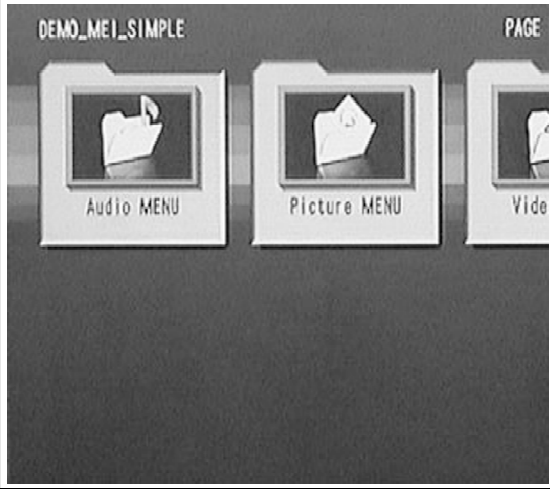

2 Eliminates compatibility issues and delivers better more consistent access to more music information like artist, song name, genre and photo information (metadata) as well as provide faster access to large amounts of music and photo files burned on CDs.

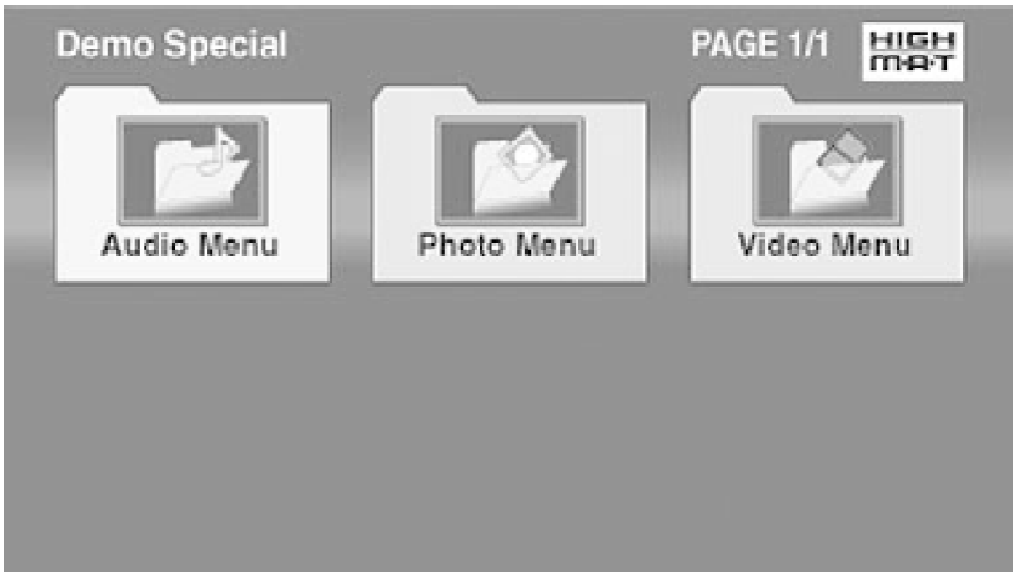
Demo Special
PAGE 1/1
HIGH MAT
Audio Menu
Photo Menu
Video Menu

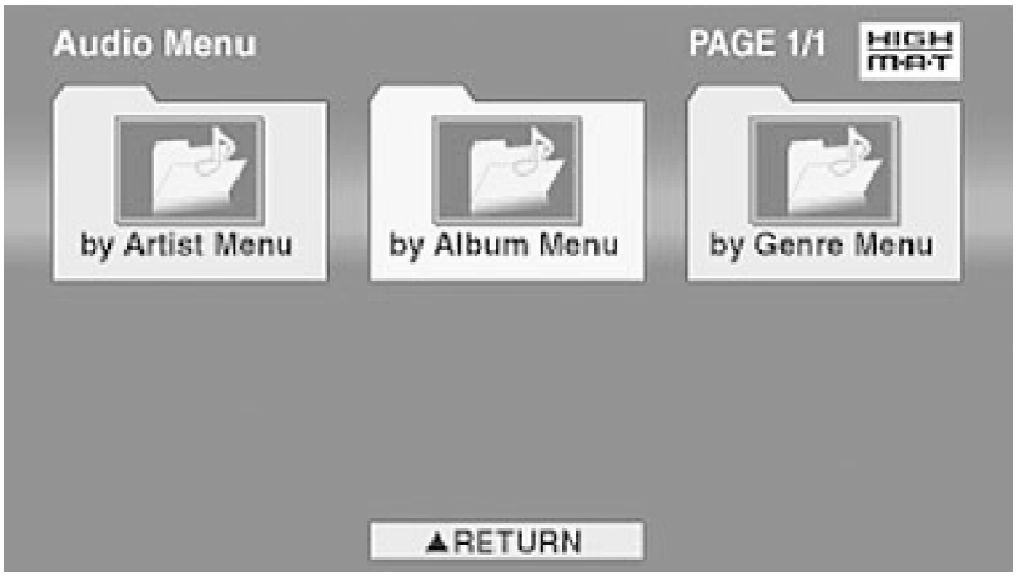
Audio Menu
PAGE 1/1
HIGH MAT
by Artist Menu
by Album Menu
by Genre Menu
▲RETURN

by Album Menu
PAGE 1/2
HIGH MAT
All by Album
Rock Classics 1980 - 1989
History of JAZZ vol.1
History of JAZZ vol.2
On the road
New Year Concert
▲RETURN
NEXT ▶

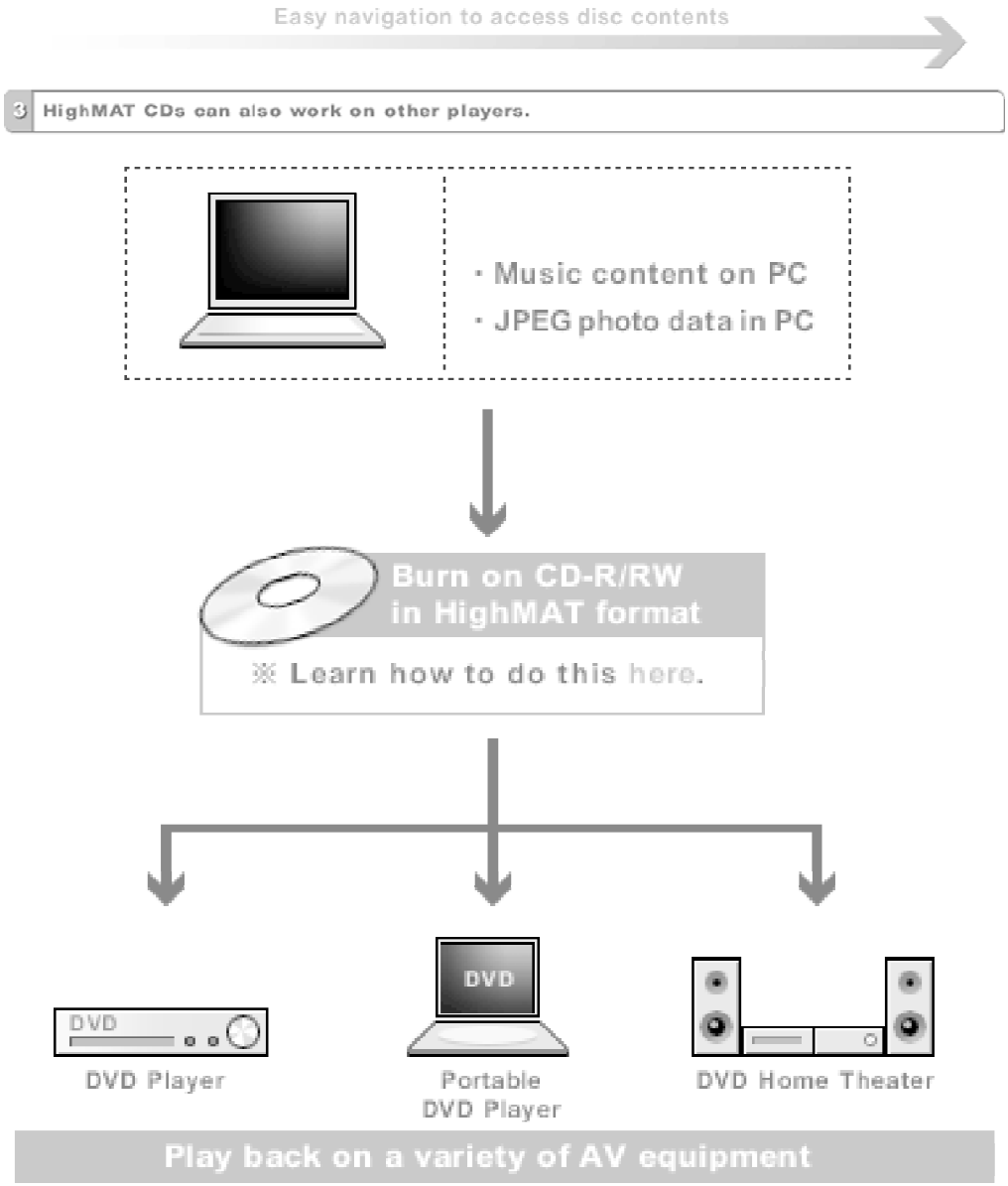

HighMAT is now available for CD Burning and in Leading DVD PlayersHighMAT is a new technology that is now available in leading software and consumer electronic devices to dramatically improve the digital media experience when you create homemade CDsHighMAT delivers a simple, standardized way for PC software and consumer electronics devices to talk to each other and work better together.

When you create your homemade CDs with software that supports HighMAT CD burning, and then play them back on a DVD player that supports HighMAT, you get better, easier navigation. You get folders you can access with a single click of your DVD player's remote control. You can view important information about your music like full song names, artist titles, album names and genre. And you can get faster startup on your home entertainment device.

To enjoy the benefits of HighMAT, all you need is software that supports HighMAT for CD burning of music or photos, as well as a home entertainment device like a DVD player that supports HighMAT for playback. Always look for the HighMAT logo on your software or home entertainment device to ensure it supports the HighMAT experience.

12. Assembling and Disassembling.

“ATTENTION SERVICER”
Some chassis components maybe have sharp edges. Be careful when disassembling and servicing.

1. **This section describes procedures for checking the operation of the major printed circuit boards and replacing the main components.**
2. **For reassembly after operation checks or replacement, reverse the respective procedures. / Special reassembly procedures are described only when required.**
3. **Select items from the following index when checks or replacement are required.**

   - **Disassembly of Side Panel (L) & (R)**
   - **Disassembly of Top Cabinet Unit**
   - **Disassembly of Deck Mechanism and Tape Eject P.C.B**
   - **Disassembly of Front Panel Assembly**
   - **Disassembly of Panel P.C.B**
   - **Disassembly of Switch P.C.B**
   - **Disassembly of Rear Cabinet**
   - **Disassembly of Tuner Pack**
   - **Disassembly of Harmonic Bass P.C.B**
   - **Disassembly of Component Video P.C.B**
   - **Disassembly of Speaker P.C.B**
   - **Disassembly of Main P.C.B**
   - **Disassembly of Transformer P.C.B**
   - **Disassembly of Power P.C.B**
   - **Disassembly of DVD Mechanism Unit**

Warning:

This product uses a laser diode. Refer to “Precaution of Laser Diode”.

12.1. Disassembly flow chart

The following chart is the procedure for disassembling the casing and inside parts for internal inspection when carrying out the servicing.
To assemble the unit, reverse the steps shown in the chart below.

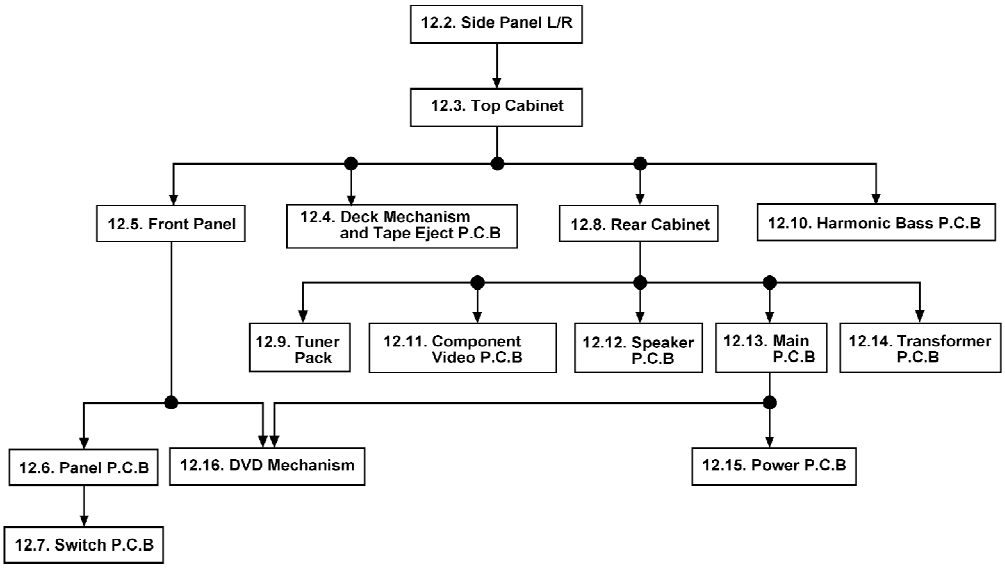

12.2. Disassembly of Side Panel (L) & (R)

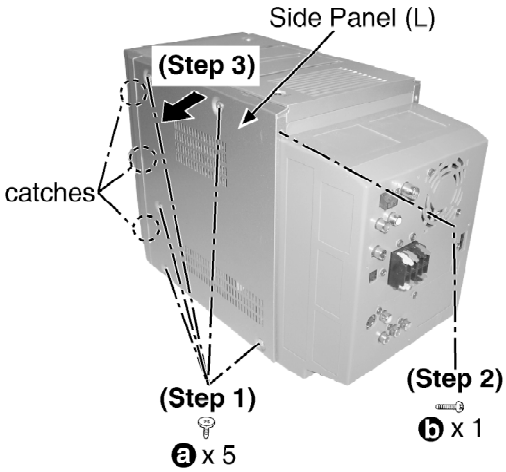

Step 1 : Remove 5 screws.
Step 2 : Remove 1 screw.
Step 3 : Remove the side panel (L) as arrow shown (Be careful of the catches).

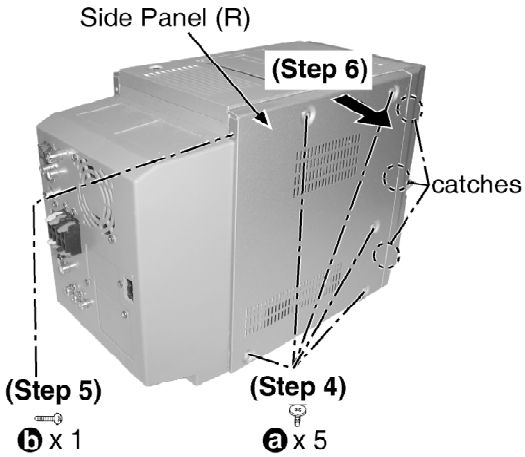

Step 4 : Remove 5 screws.
Step 5 : Remove 1 screw.
Step 6 : Remove the side panel (R) as arrow shown (Be careful of the catches).

12.3. Disassembly of Top Cabinet Unit

- Follow the (Step 1) - (Step 6) of Item 12.2.

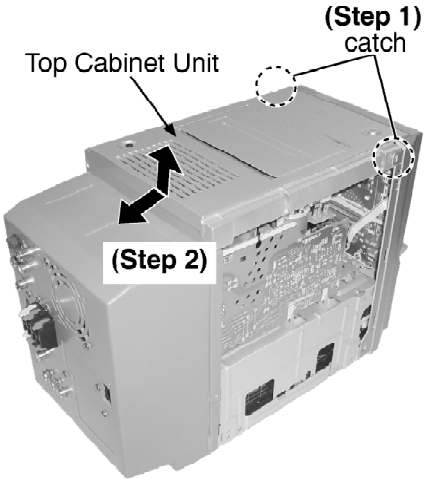

Step 1 : Release catches at both ends.
Step 2 : Lift up the top cabinet unit, push backward as arrow shown and flip top cabinet unit sideway.

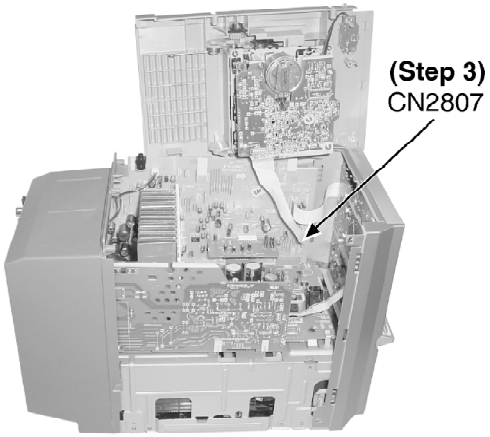

Step 3 : Detach the FFC CN2807.

12.4. Disassembly of Deck Mechanism and Tape Eject P.C.B

- Follow the (Step 1) - (Step 6) of Item 12.2.
- Follow the (Step 1) - (Step 3) of Item 12.3.

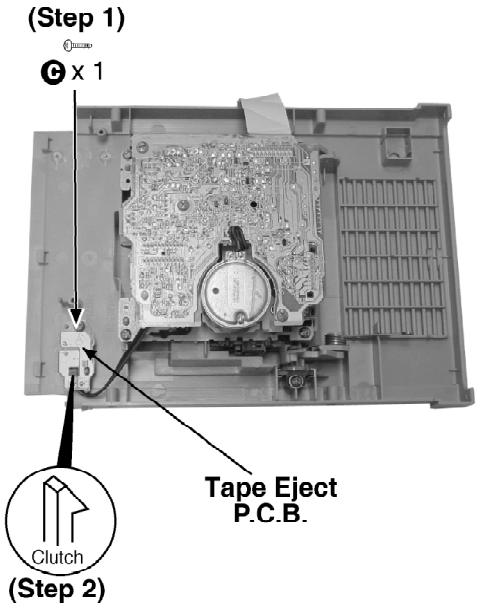

Step 1 : Remove 1 screw.
Step 2 : Release the clutch.

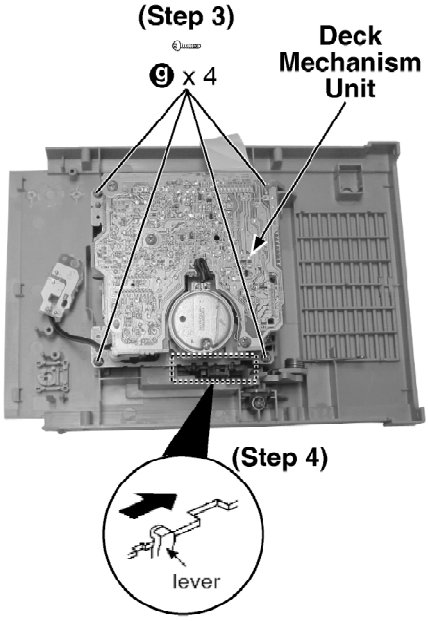

Step 3 : Remove 4 screws.
Step 4 : Push the lever as arrow shown to open the cassette lid and remove the deck mechanism unit.

12.5. Disassembly of Front Panel Assembly

- Follow the (Step 1) - (Step 6) of Item 12.2.
- Follow the (Step 1) - (Step 3) of Item 12.3.

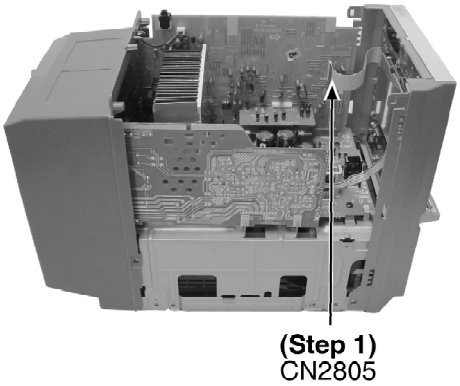

Step 1 : Detach the FFC CN2805.

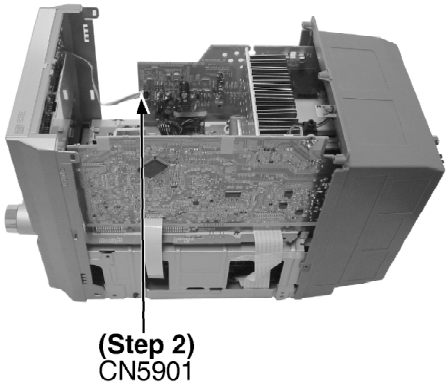

Step 2 : Detach the connector CN5901.

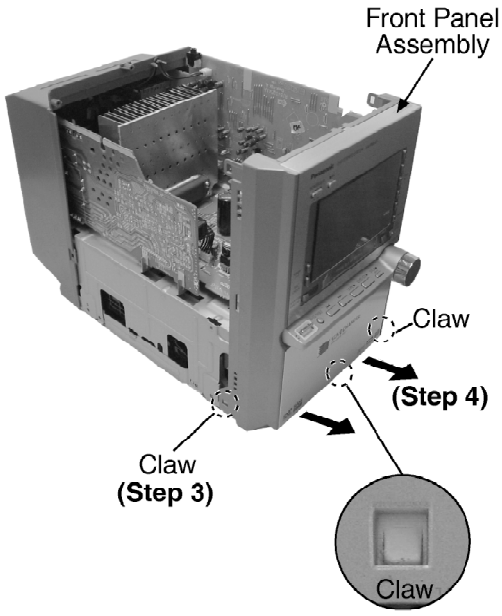

Step 3 : Release 3 claws.
Step 4 : Remove the front panel assembly as arrow shown.

12.6. Disassembly of Panel P.C.B

- Follow the (Step 1) - (Step 6) of Item 12.2.

- Follow the (Step 1) - (Step 4) of Item 12.3.
- Follow the (Step 1) - (Step 4) of Item 12.5.

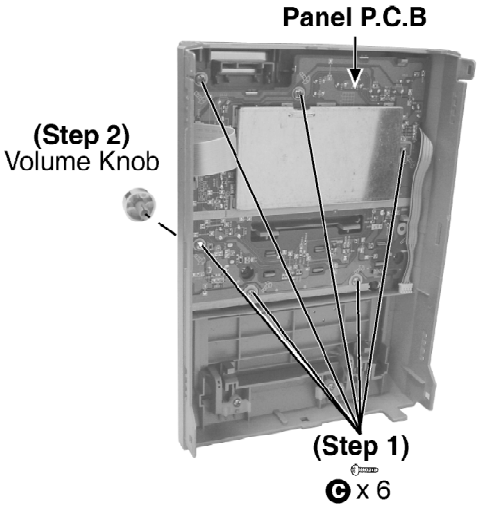

Step 1 : Remove 6 screws.
Step 2 : Remove the volume knob.

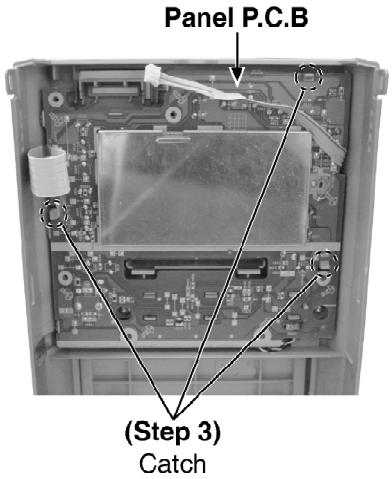

Step 3 : Release 3 catches.

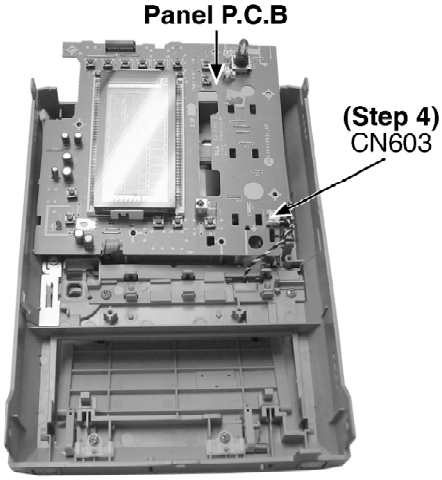

Step 4 : Detach the connector CN603.

12.7. Disassembly of Switch P.C.B

- Follow the (Step 1) - (Step 6) of Item 12.2.
- Follow the (Step 1) - (Step 4) of Item 12.3.
- Follow the (Step 1) - (Step 4) of Item 12.5.
- Follow the (Step 1) - (Step 4) of Item 12.6.

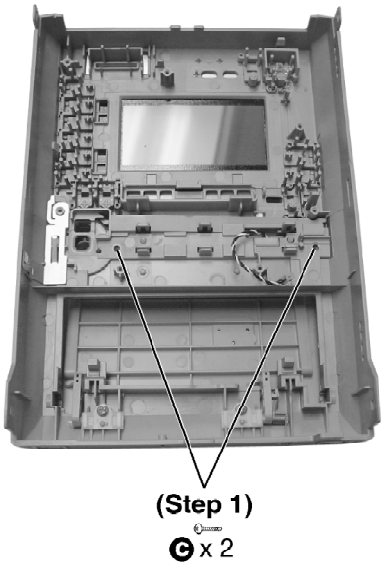

Step 1 : Remove 2 screws.

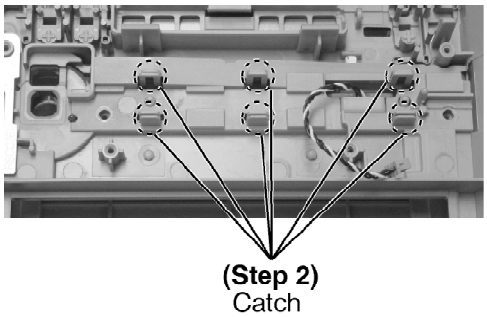

Step 2 : Release 6 catches.

Step 3 : Remove the center stage unit as arrow shown.

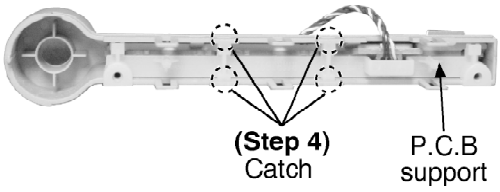

Step 4 : Release 4 catches to remove the P.C.B support.

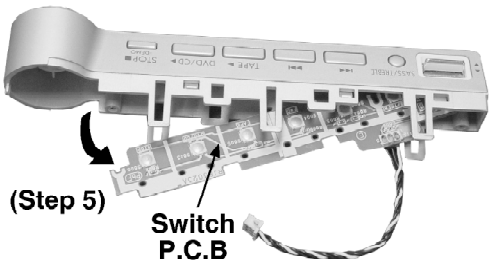

Step 5 : Remove the Switch P.C.B as arrow shown.

12.8. Disassembly of Rear Cabinet

- Follow the (Step 1) - (Step 6) of Item 12.2.

- Follow the (Step 1) - (Step 4) of Item 12.3.

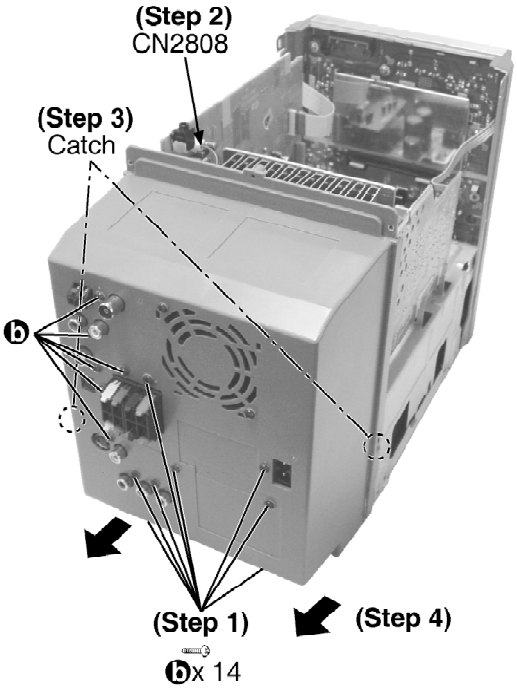

Step 1 : Remove 14 screws.
Step 2 : Detach the connector CN2808.
Step 3 : Release 2 catches.
Step 4 : Remove the rear cabinet as arrow shown.

12.9. Disassembly of Tuner Pack

- Follow the (Step 1) - (Step 6) of Item 12.2.
- Follow the (Step 1) - (Step 4) of Item 12.3.
- Follow the (Step 1) - (Step 4) of Item 12.8.

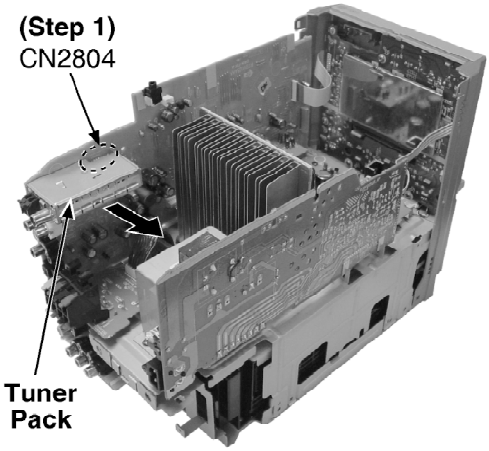

Step 1 : Detach the connector CN2804 and remove the tuner pack as arrow shown.

12.10. Disassembly of Harmonic Bass P.C.B

- Follow the (Step 1) - (Step 6) of Item 12.2.
- Follow the (Step 1) - (Step 4) of Item 12.3.

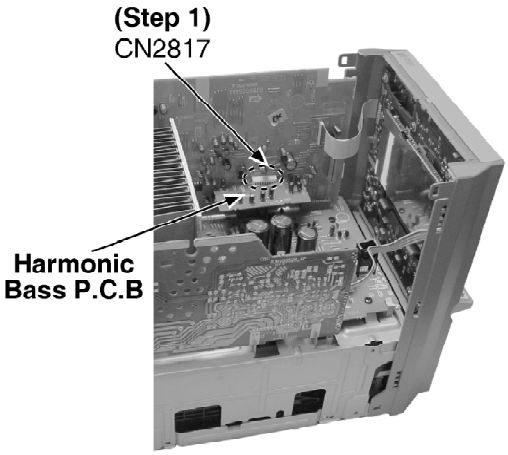

Step 1 : Detach the connection CN2817 and remove the Harmonic Bass P.C.B.

12.11. Disassembly of Component Video P.C.B

- Follow the (Step 1) - (Step 6) of Item 12.2.
- Follow the (Step 1) - (Step 4) of Item 12.3.
- Follow the (Step 1) - (Step 4) of Item 12.8.

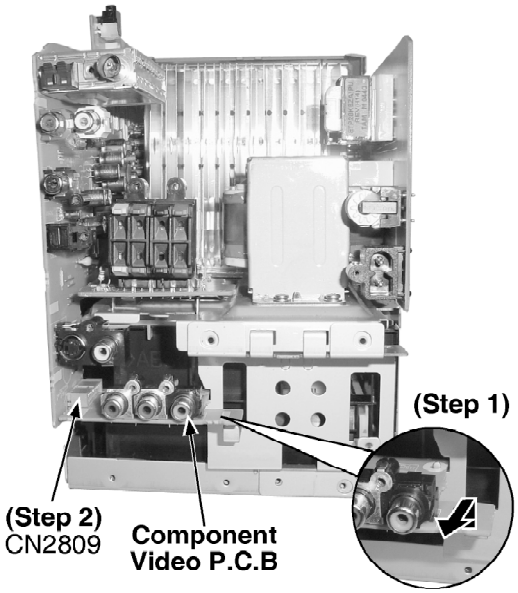

Step 1 : Lift the Component Video P.C.B slightly outward as arrow shown.
Step 2 : Detach the connection CN2809 and remove the Component Video P.C.B.

12.12. Disassembly of Speaker P.C.B

- Follow the (Step 1) - (Step 6) of Item 12.2.
- Follow the (Step 1) - (Step 4) of Item 12.3.
- Follow the (Step 1) - (Step 4) of Item 12.8.

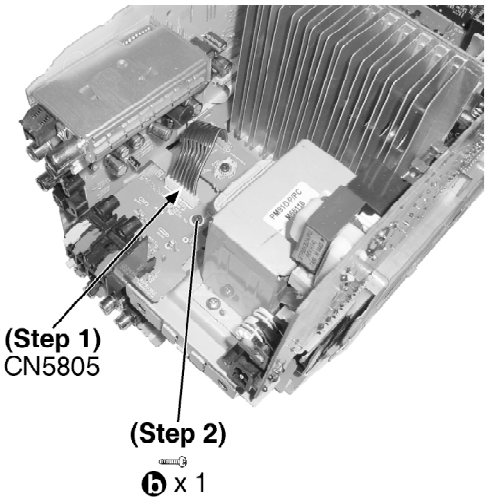

Step 1 : Detach the connection CN5805.
Step 2 : Remove 1 screw.

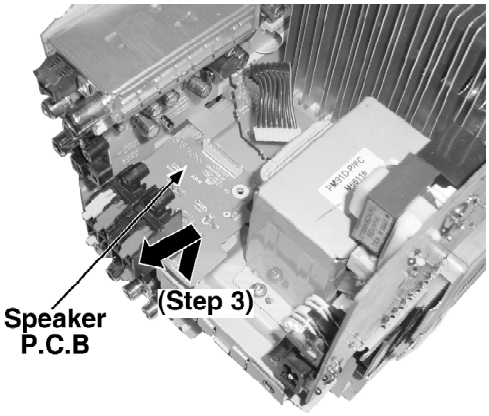

Step 3 : Remove the Speaker P.C.B as arrow shown.

12.13. Disassembly of Main P.C.B

- Follow the (Step 1) - (Step 6) of Item 12.2.
- Follow the (Step 1) - (Step 4) of Item 12.3.
- Follow the (Step 1) - (Step 4) of Item 12.8.

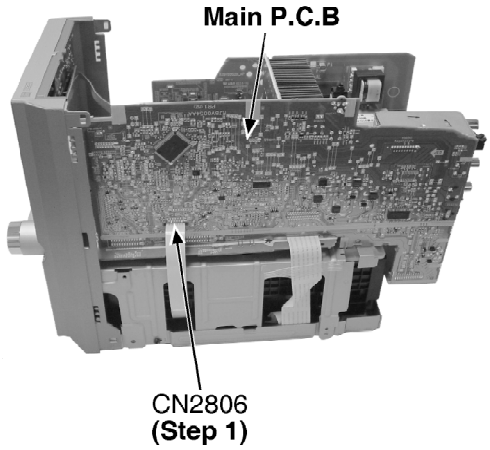

Step 1 : Detach the FFC CN2806.

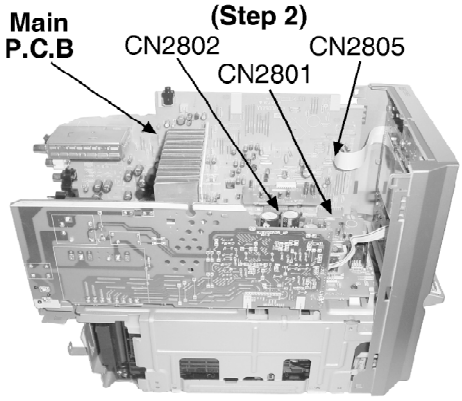

Step 2 : Detach the FFC CN2805 and connection CN2801, CN2802.

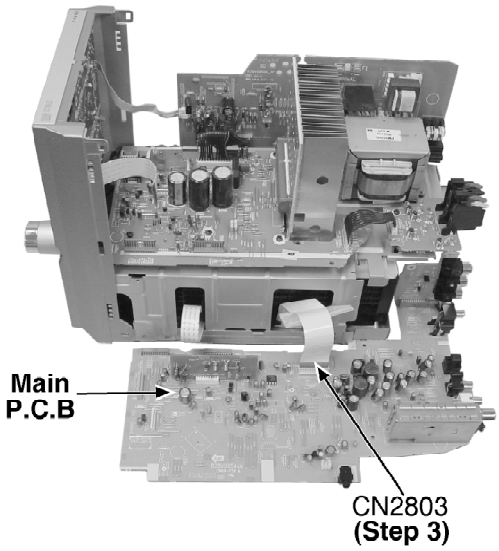

Step 3 : Detach the FFC CN2803.

12.14. Disassembly of Transformer P.C.B

- Follow the (Step 1) - (Step 6) of Item 12.2.

- Follow the (Step 1) - (Step 4) of Item 12.3.
- Follow the (Step 1) - (Step 4) of Item 12.8.

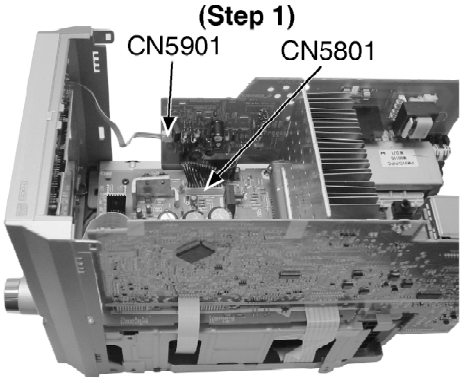

Step 1 : Detach the connector CN5801, CN5901.

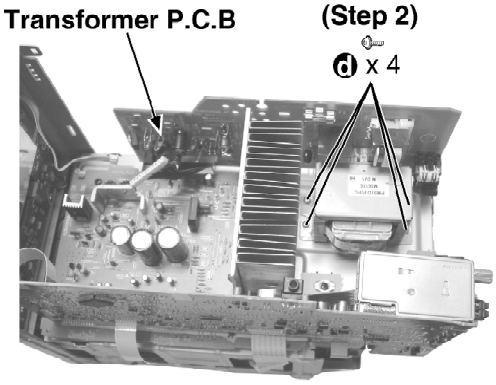

Step 2 : Remove 4 screws.

12.15. Disassembly of Power P.C.B

- Follow the (Step 1) - (Step 6) of Item 12.2.
- Follow the (Step 1) - (Step 4) of Item 12.3.
- Follow the (Step 1) - (Step 4) of Item 12.8.
- Follow the (Step 1) - (Step 3) of Item 12.13.

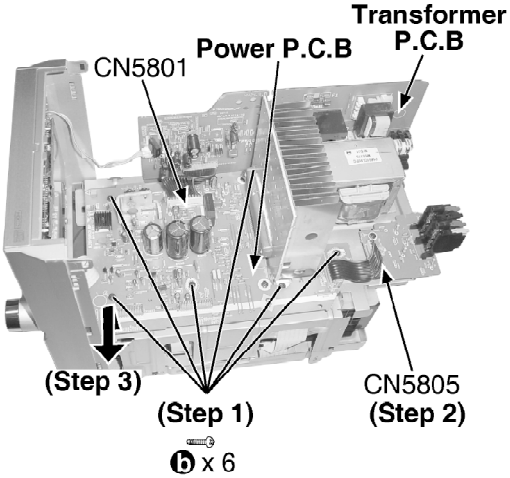

Step 1 : Remove 6 screws.
Step 2 : Detach the connector CN5805 & CN5801.
Step 3 : Remove the Power P.C.B as arrow shown.

12.16. Disassembly of DVD Mechanism Unit

- Follow the (Step 1) - (Step 6) of Item 12.2.
- Follow the (Step 1) - (Step 4) of Item 12.3.
- Follow the (Step 1) - (Step 4) of Item 12.5.
- Follow the (Step 1) - (Step 4) of Item 12.8.
- Follow the (Step 1) - (Step 3) of Item 12.13.

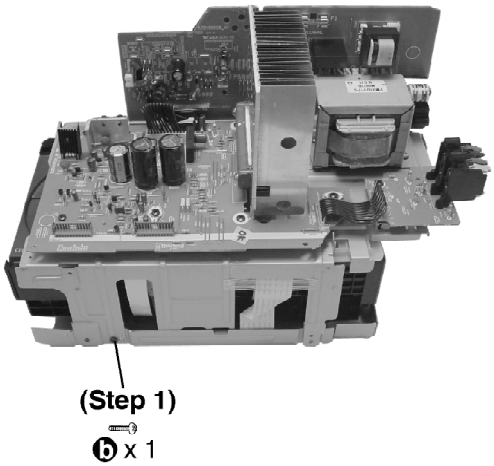

Step 1 : Remove 1 screw.

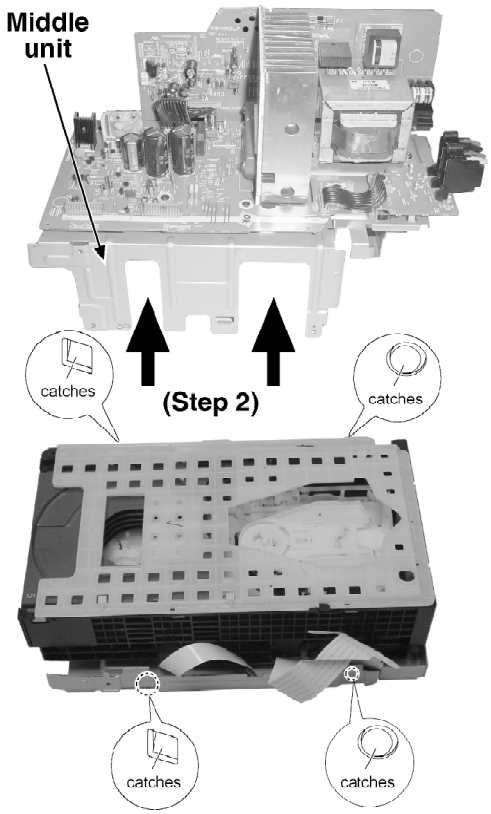

Step 2 : Release the catches and remove the middle unit as arrow shown.

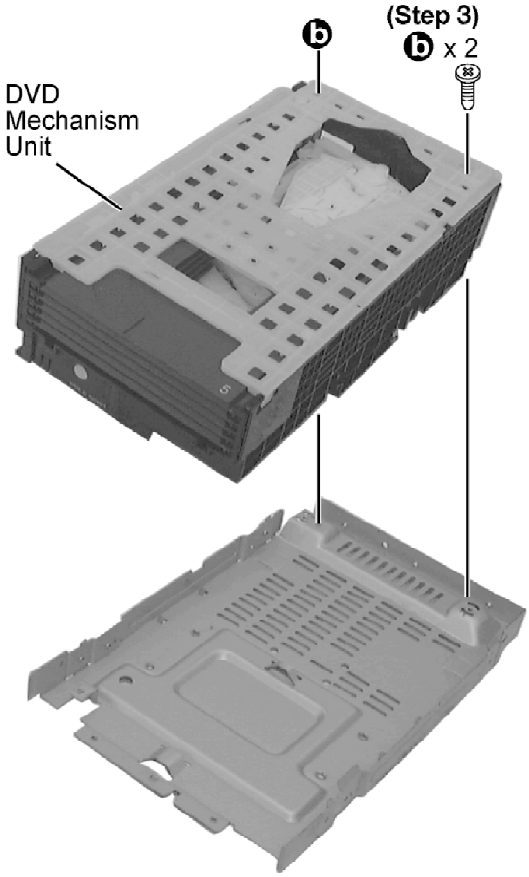

Step 3 : Remove 2 screws and lift up DVD Mechanism unit.

12.17. Checking Procedure for Each Major P.C.B.

12.17.1. Replacement of the Power Amplifier IC

- Replacement of the Power Amplifier IC
- Follow the (Step 1) - (Step 6) of Item 12.2.
- Follow the (Step 1) - (Step 4) of Item 12.3.
- Follow the (Step 1) - (Step 4) of Item 12.5.
- Follow the (Step 1) - (Step 4) of Item 12.8.
- Follow the (Step 1) - (Step 3) of Item 12.13.
- Follow the (Step 1) - (Step 2) of Item 12.16.

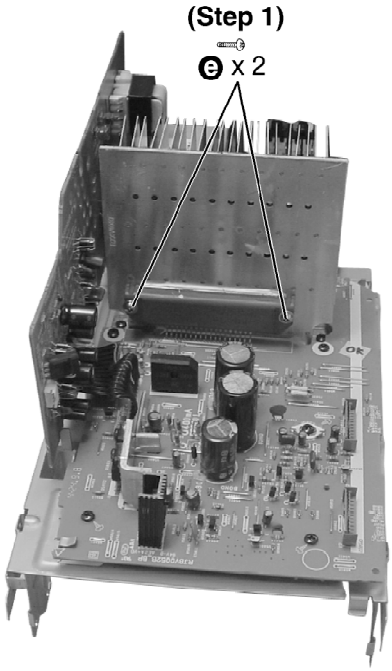

Step 1 Remove 2 screws.

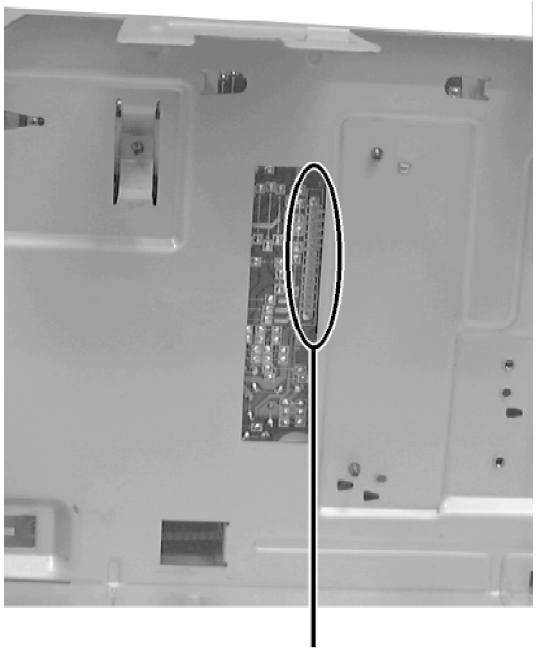

Step 2 Unsolder the terminals of Power Amp IC (IC500) and replace the component.

12.18. Procedure for Replacing Deck Holder

- Follow the (Step 1) - (Step 6) of Item 12.2.
- Follow the (Step 1) - (Step 4) of Item 12.3.
- Follow the (Step 1) - (Step 4) of Item 12.4.

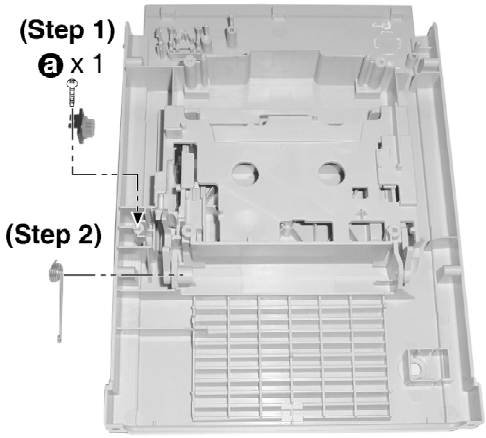

Step 1 : Remove 1 screw and lift up damper gear.
Step 2 : Remove the cassette open spring.

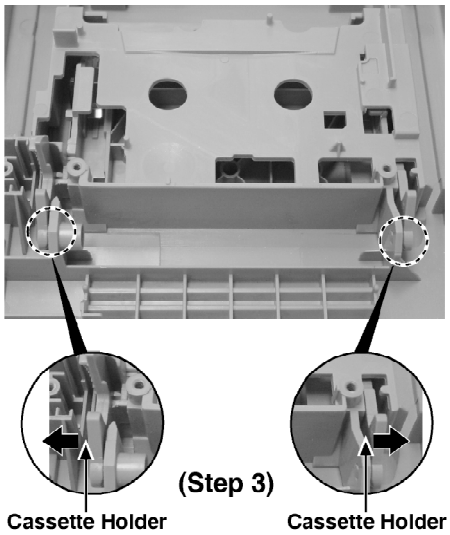

Step 3 : Pull out the ribs of the cassette holder to the arrow direction.

12.19. Replacing for CD Lid

- Follow the (Step 1) - (Step 6) of Item 12.2.
- Follow the (Step 1) - (Step 4) of Item 12.3.
- Follow the (Step 1) - (Step 4) of Item 12.5.

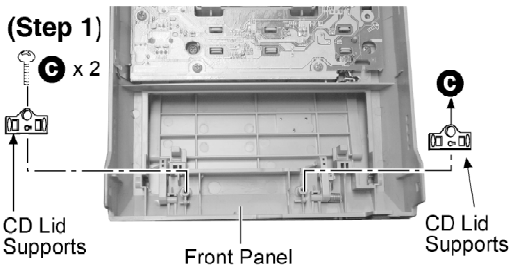

Step 1 : Remove 2 screws and 2 CD lid supports.

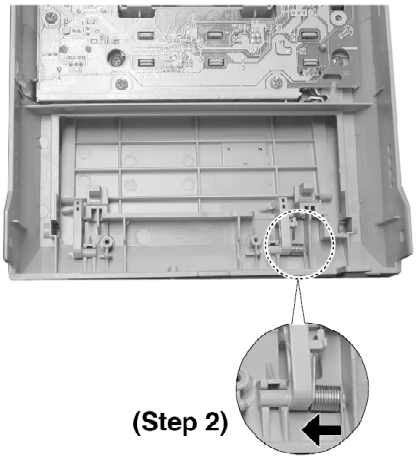

Step 2 : Push the spring as arrow shown.

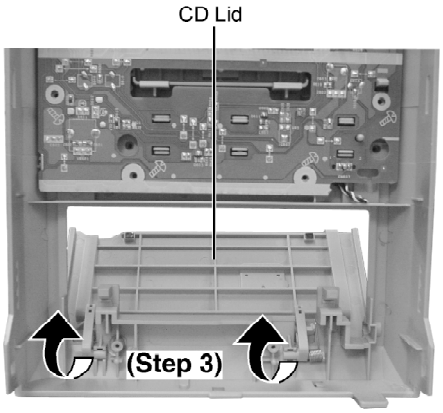

Step 3 : Remove the CD lid as arrow shown.

12.20. Procedure for Replacing Pinch Roller and Head Block (Deck Mechanism Unit)

- Follow the (Step 1) - (Step 6) of Item 14.2.
- Follow the (Step 1) - (Step 4) of Item 14.3.
- Follow the (Step 1) - (Step 4) of Item 14.4.

Step 1
Release catches to remove the pinch rollers (F).

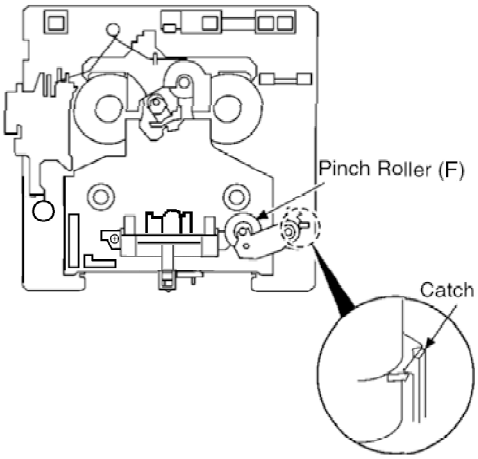

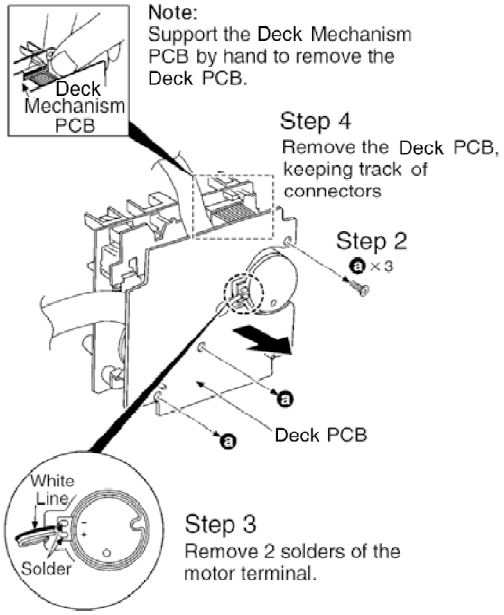

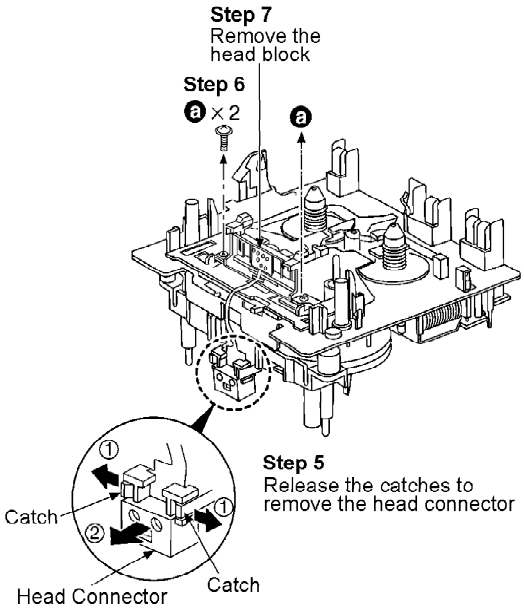

12.21. Procedure for Replacing Motor, Capstan Belt A, Capstan Belt B, and Winding Belt (Deck Mechanism Unit)

- Follow the (Step 1) - (Step 6) of Item 14.2.
- Follow the (Step 1) - (Step 4) of Item 14.3.
- Follow the (Step 1) - (Step 4) of Item 14.4.
- Follow the (Step 1) - (Step 4) of Item 14.20.

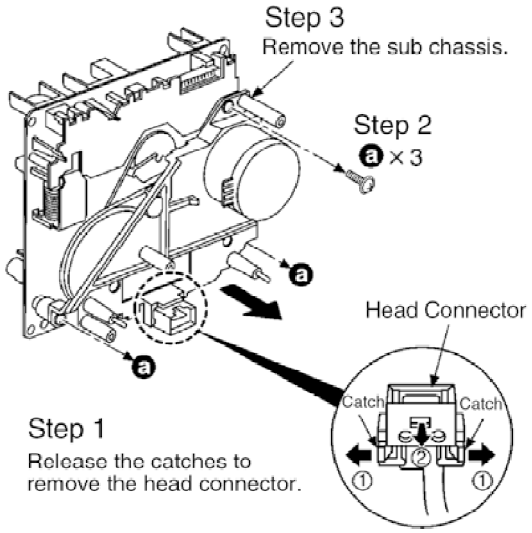
Step 3
Remove the sub chassis.
Step 2
ⓐ × 3
ⓐ
ⓐ
Head Connector
Catch
Catch
Step 1
Release the catches to remove the head connector.
①
②
①

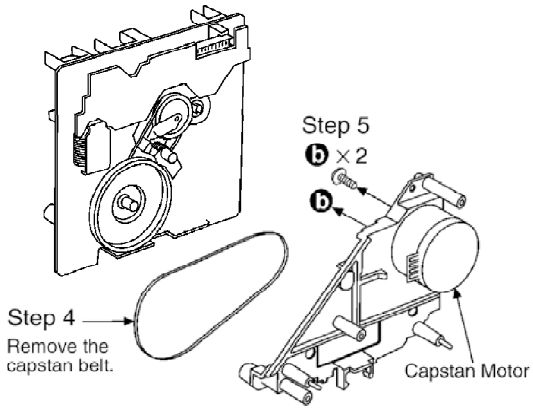
Step 5
ⓑ × 2
ⓑ
Step 4
Remove the capstan belt.
Capstan Motor

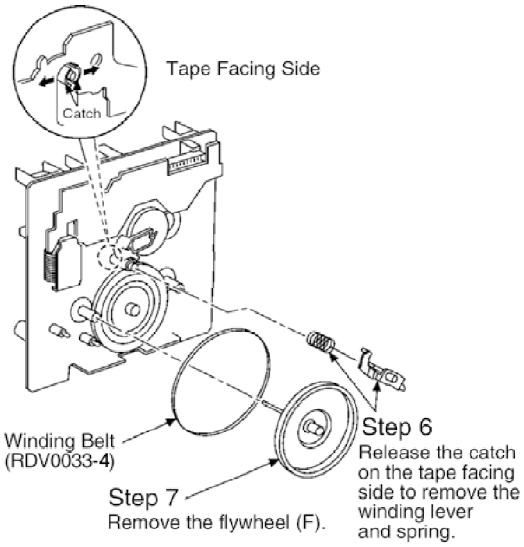
Tape Facing Side
Catch
Winding Belt
(RDV0033-4)
Step 6
Release the catch on the tape facing side to remove the winding lever and spring.
Step 7
Remove the flywheel (F).

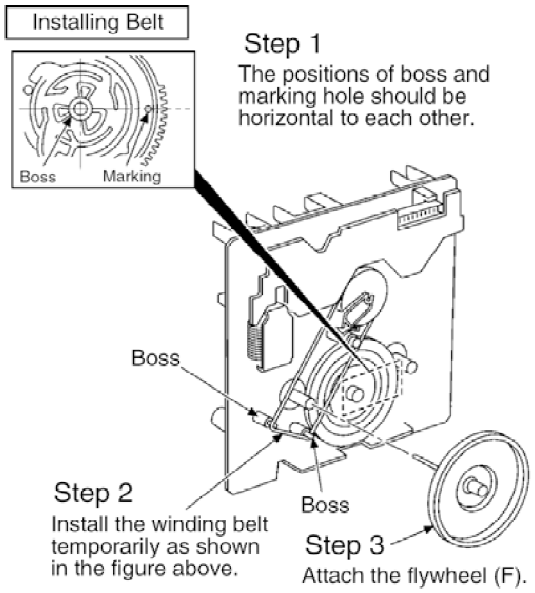
Installing Belt
Boss
Marking
Step 1
The positions of boss and marking hole should be horizontal to each other.
Boss
Boss
Step 2
Install the winding belt temporarily as shown in the figure above.
Step 3
Attach the flywheel (F).

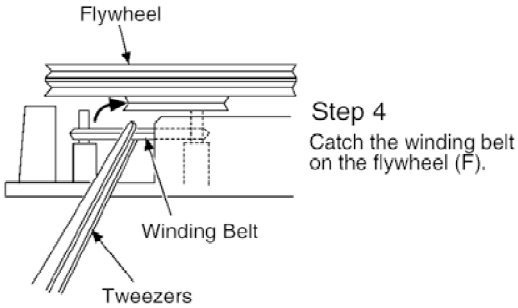
Flywheel
Step 4
Catch the winding belt on the flywheel (F).
Winding Belt
Tweezers

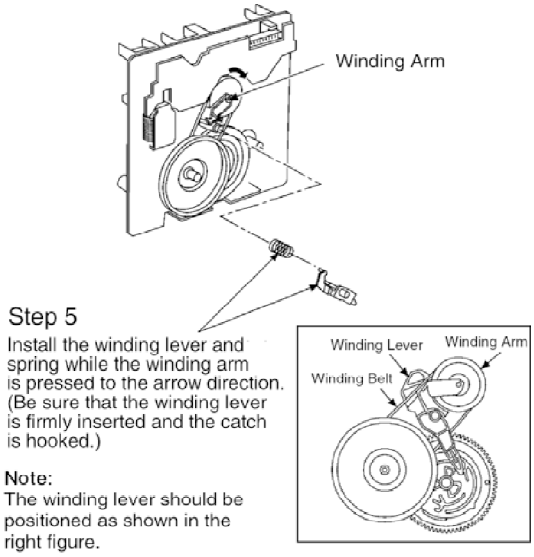
Winding Arm
Step 5
Install the winding lever and spring while the winding arm is pressed to the arrow direction. (Be sure that the winding lever is firmly inserted and the catch is hooked.)
Note:
The winding lever should be positioned as shown in the right figure.
Winding Lever
Winding Arm
Winding Belt

Step 6

Install the capstan belt temporarily as shown in the figure below.

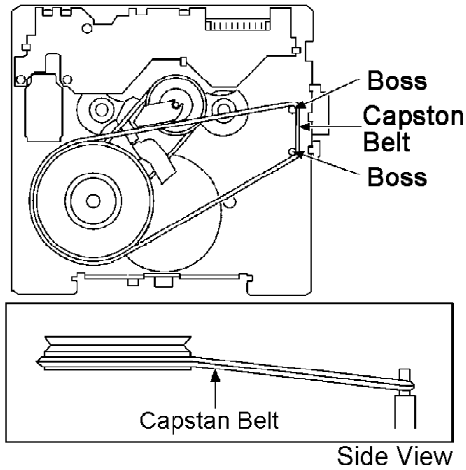

Note:
Keep the belt away from grease.

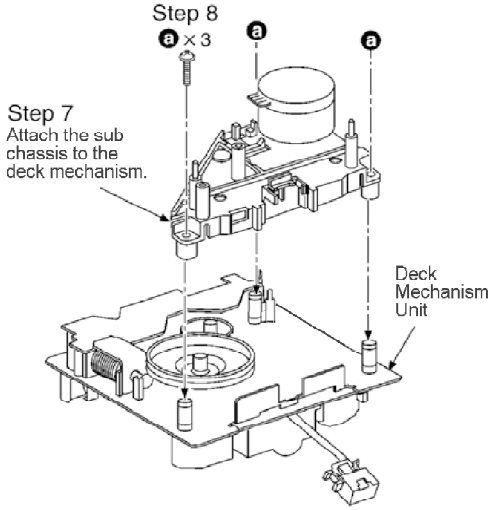

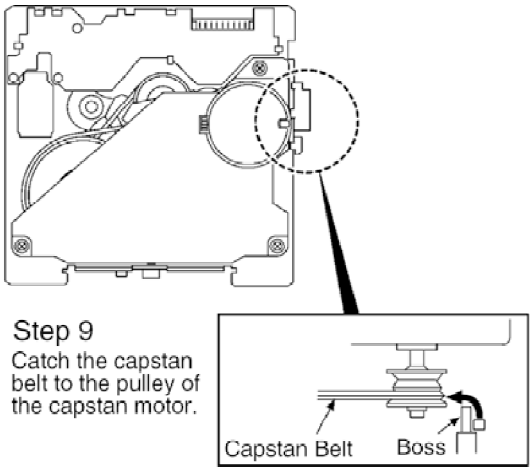

12.22. Procedure for Replacing Parts on Deck Mechanism PCB

- Follow the (Step 1) - (Step 6) of Item 14.2.

- Follow the (Step 1) - (Step 4) of Item 14.3.
- Follow the (Step 1) - (Step 4) of Item 14.4.

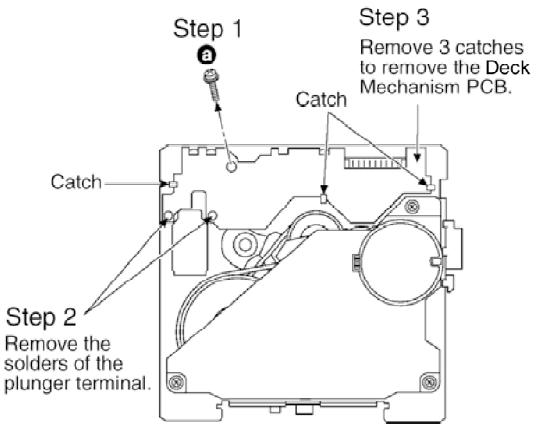

12.23. Procedure for removing CR16 mechanism (Precaution)

1. Turn off by pressing power SW in the body.
2. Unplug AC power cord after the indication of [BYE], then disassemble the body.
3. Disassemble the body, and take out CD loading mechanism.
4. Perform disassembly according to the following procedure for disassembly.

12.24. CR16 mechanism disassembly procedure

12.24.1. Gear for servicing information

- This unit has a gear which used for chacking items (open/close of disc tray, up/down operation of traverse unit by manually) when servicing. (For gear information, that is described on the items for disassembly procedures.)
- For preparation of gear (for servicing), perform the procedures as follows.
- In case of re-servicing the same set, the " gear for servicing" may be took off because it had been used. So, the "gear for servicing" must be stored.

1. Remove the gear attached to top cover of CD loading mechanism.

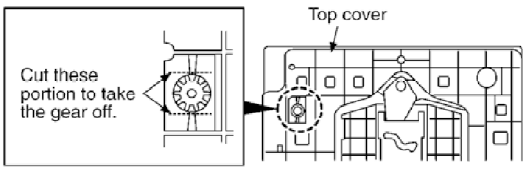

2. Insert the hexagonal wrench (2.5mm) into the gear.

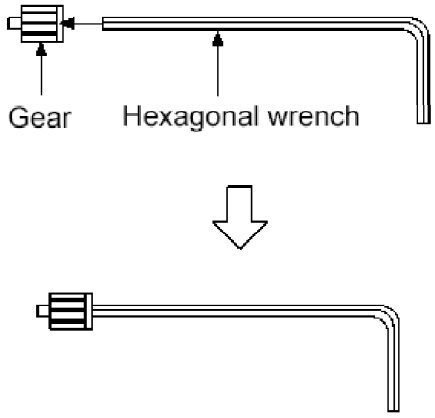

(Preparation of gear as jig is completed)

12.24.2. Replacement of traverse deck

- Follow the (Step 1) - (Step 6) of Item 12.2.
- Follow the (Step 1) - (Step 4) of Item 12.3.
- Follow the (Step 1) - (Step 4) of Item 12.5.
- Follow the (Step 1) - (Step 4) of Item 12.8.
- Follow the (Step 1) - (Step 3) of Item 12.13.
- Follow the (Step 1) - (Step 4) of Item 12.16.

(Step 1)
Move ribs at both sides to the arrow direction
(The vertical rack (R) slides and the groove opens)

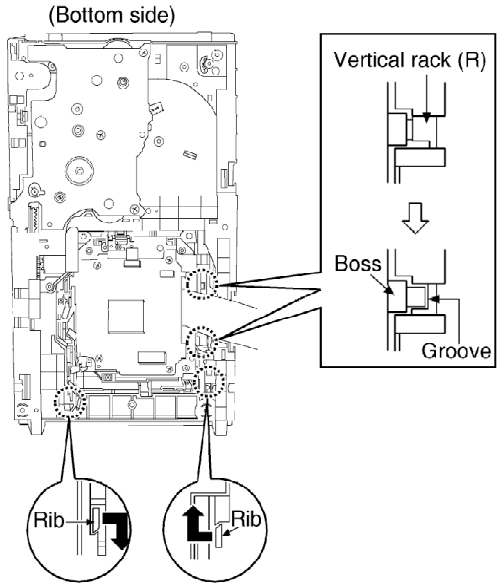

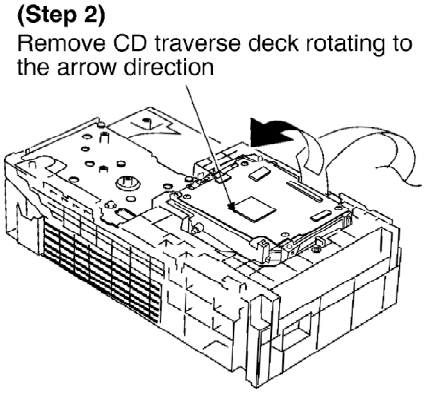

12.24.3. Replacement of optical pickup unit

- Follow the (Step 1) - (Step 6) of Item 12.2.
- Follow the (Step 1) - (Step 4) of Item 12.3.
- Follow the (Step 1) - (Step 4) of Item 12.5.
- Follow the (Step 1) - (Step 4) of Item 12.8.
- Follow the (Step 1) - (Step 3) of Item 12.13.
- Follow the (Step 1) - (Step 4) of Item 12.16.
- Follow the (Step 1) - (Step 2) of Item 12.24.2.

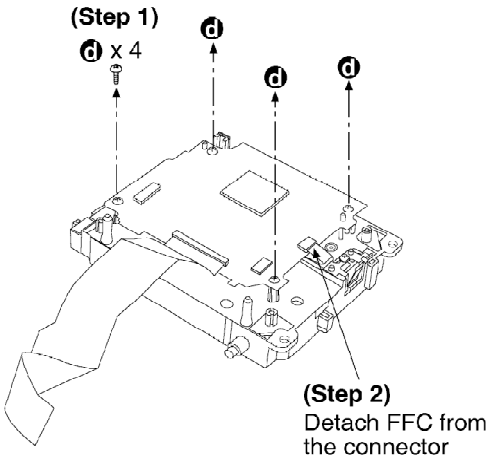

(Step 3)
Pull out FFC from the connector

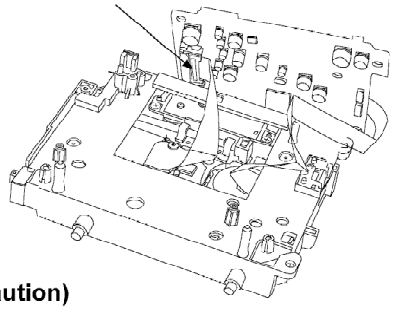

(Caution)
Insert a short pin into FFC of the optical pickup. [See "Notice on handling of the optical pickup"]

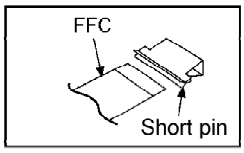

(Step 4)
Widening the catch, push the pin in.

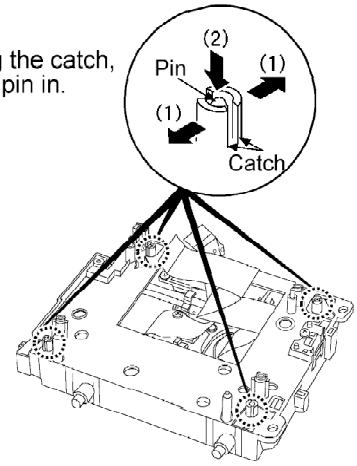

(Step 5)
Remove 4 pin

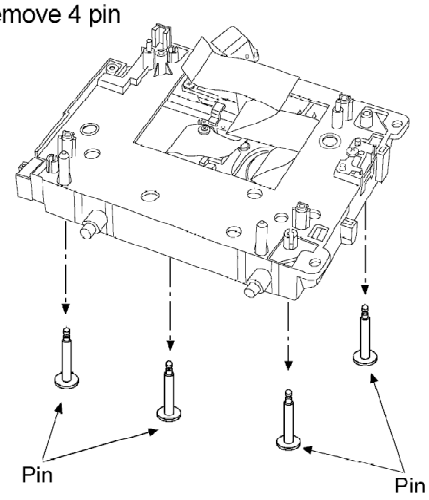

(Caution)
Be careful the catches when remove the traverse deck unit.

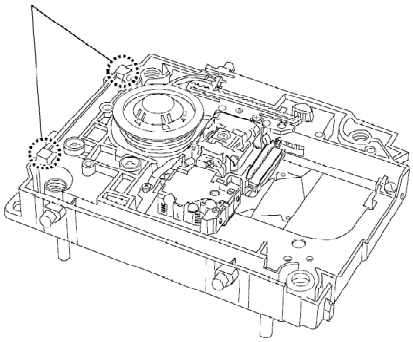

(Step 6)
Remove the traverse deck unit as arrow shown.

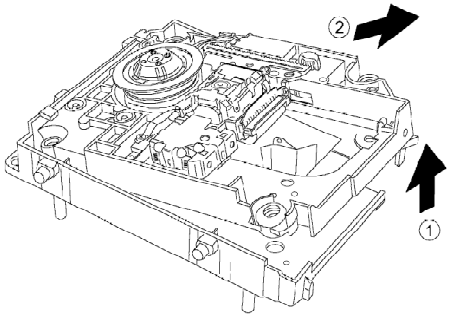

(Step 7)
Shift the optical pickup to the furthest backward as arrow shown.

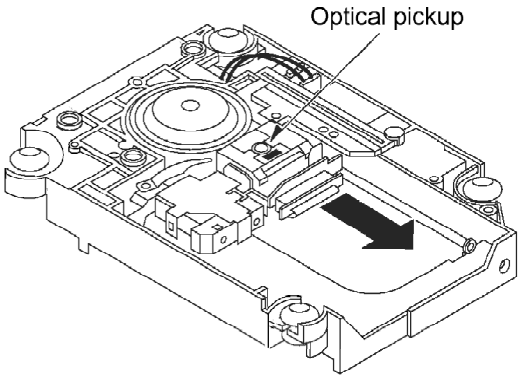

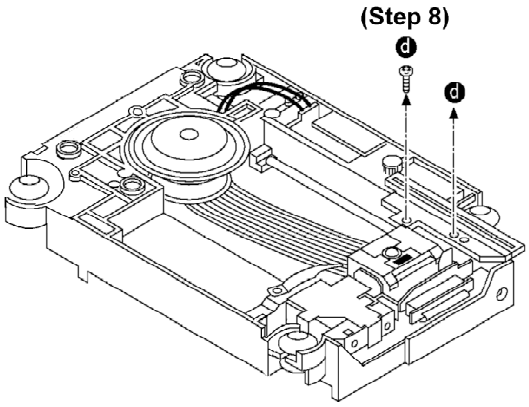

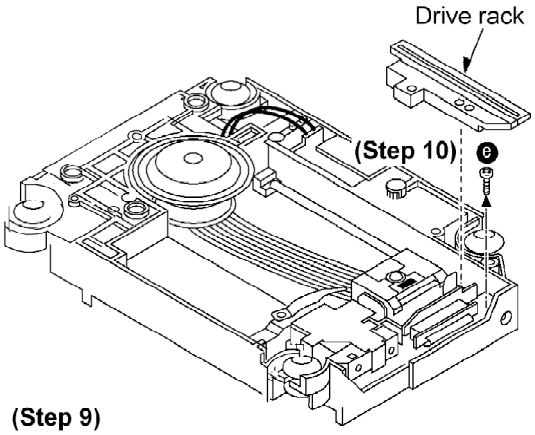

(Step 9)
Remove the drive rack.

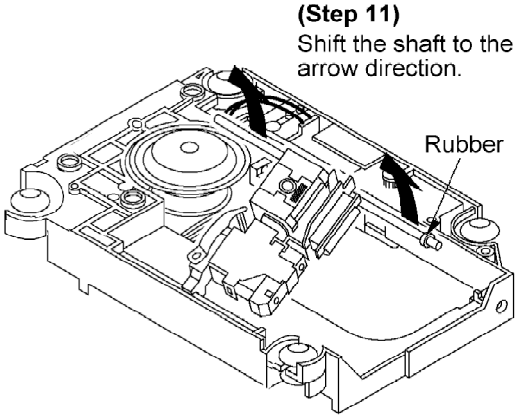

(Step 12)
Lift the optical pickup unit with the shaft.

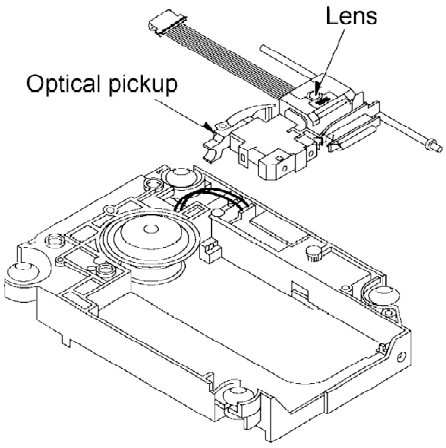

(Caution)

1. Do not subject optical pickup to static electricity as it is extremely sensitive to electrical shock
2. Do not touch the lens of the optical pickup

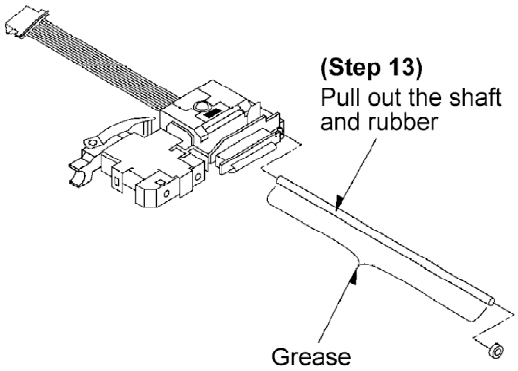

Procedure for Assembly of Optical Pickup Unit

(Step 1)
Put relay FPC into a hole of frame

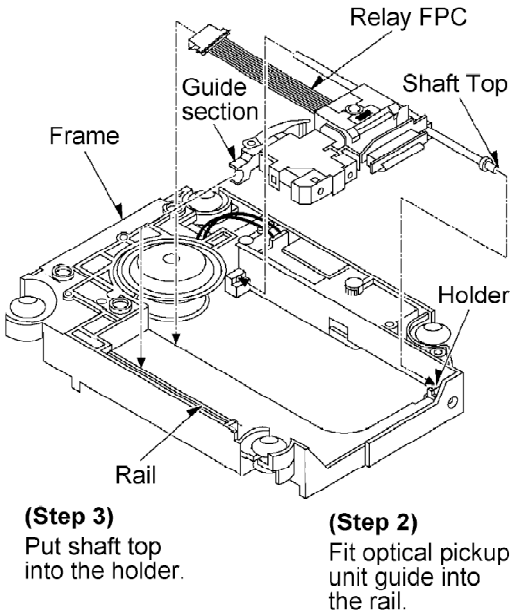

12.24.4. Disassembly of Traverse Motor (Unit) and Spindle Motor (Unit)

- Follow the (Step 1) - (Step 6) of Item 12.2.
- Follow the (Step 1) - (Step 4) of Item 12.3.
- Follow the (Step 1) - (Step 4) of Item 12.5.
- Follow the (Step 1) - (Step 4) of Item 12.8.
- Follow the (Step 1) - (Step 3) of Item 12.13.
- Follow the (Step 1) - (Step 4) of Item 12.16.
- Follow the (Step 1) - (Step 2) of Item 12.24.2.
- Follow the (Step 1) - (Step 13) of Item 12.24.3.

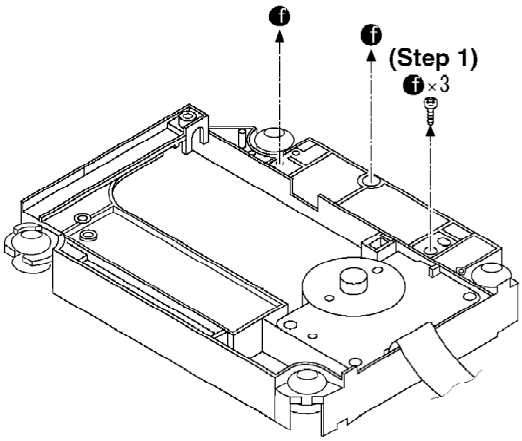

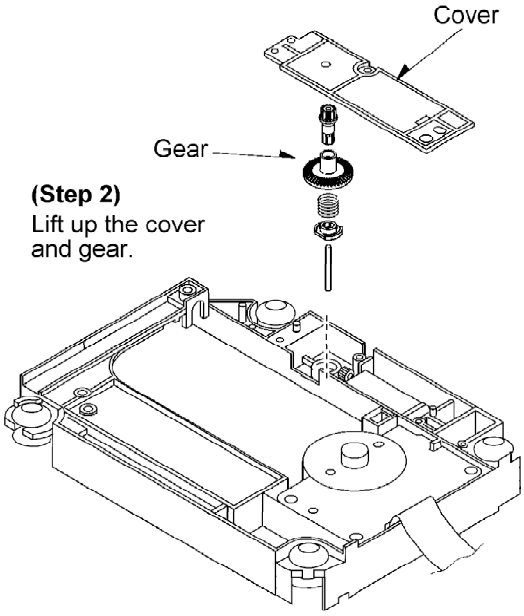
Cover
Gear
(Step 2)
Lift up the cover
and gear.

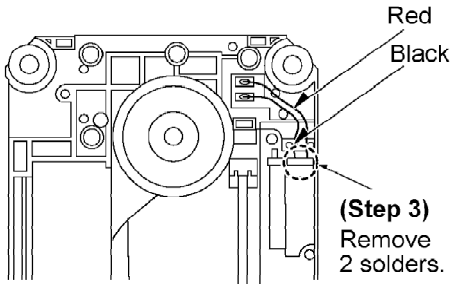
Red
Black
(Step 3)
Remove
2 solders.

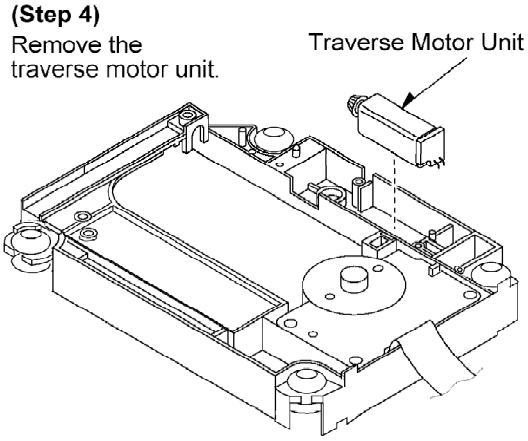
(Step 4)
Remove the
traverse motor unit.
Traverse Motor Unit

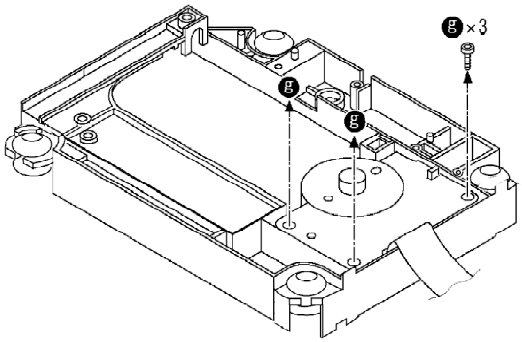

(Step 5)
Remove 3 screws with 1.8mm slotted screwdriver.

(Step 6)
Remove the Spindle Motor

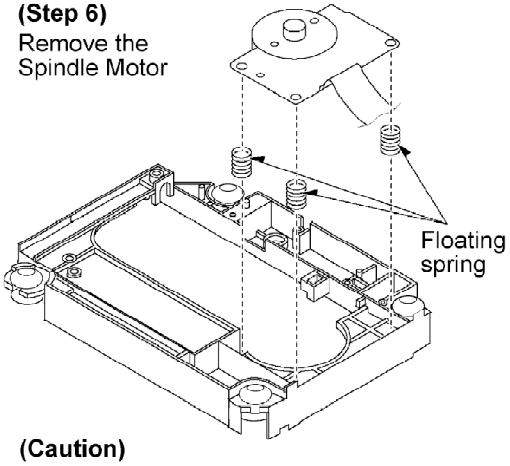

(Caution)
As floating springs (3 pieces) come off at the same time, be careful not to lose them.

12.24.5. Replacement for the disc tray

- Follow the (Step 1) - (Step 6) of Item 12.2.
- Follow the (Step 1) - (Step 4) of Item 12.3.
- Follow the (Step 1) - (Step 4) of Item 12.5.
- Follow the (Step 1) - (Step 4) of Item 12.8.
- Follow the (Step 1) - (Step 3) of Item 12.13.
- Follow the (Step 1) - (Step 4) of Item 12.16.

(Step 1)
Rotate the gear for servicing and move the select rack to advanced corner.

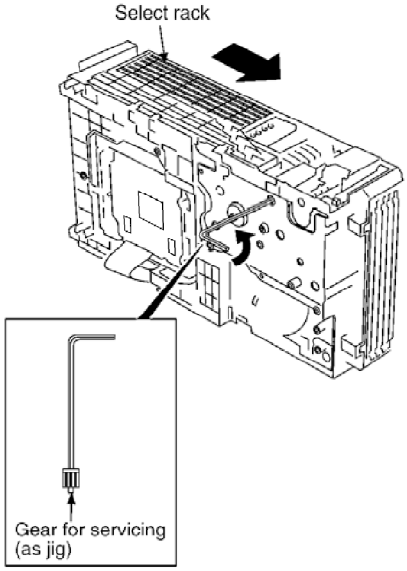

(Step 2)
Fit the mechanism unit base to select rack.

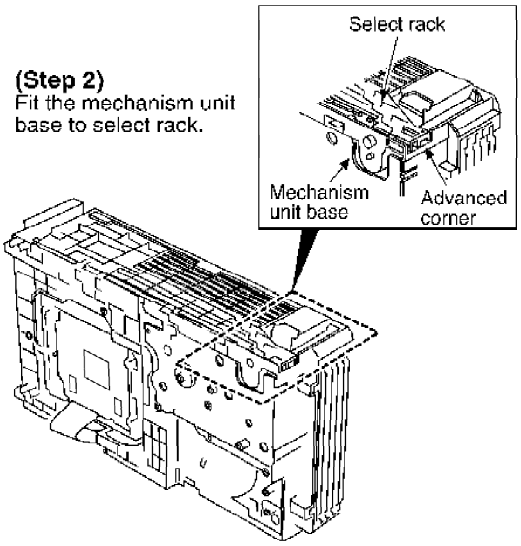

(Step 3)
Release the 2 claws, and then remove the top cover.

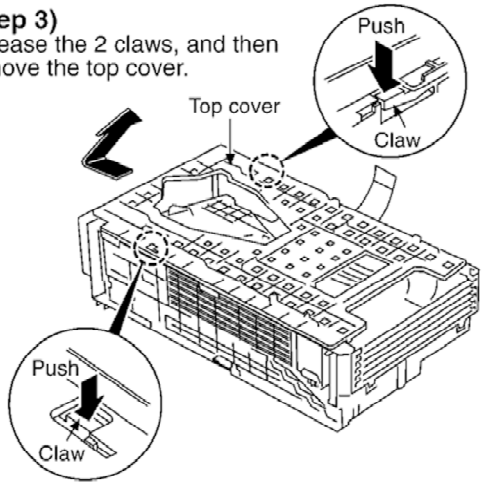

(Step 4)
Remove the open switch lever.

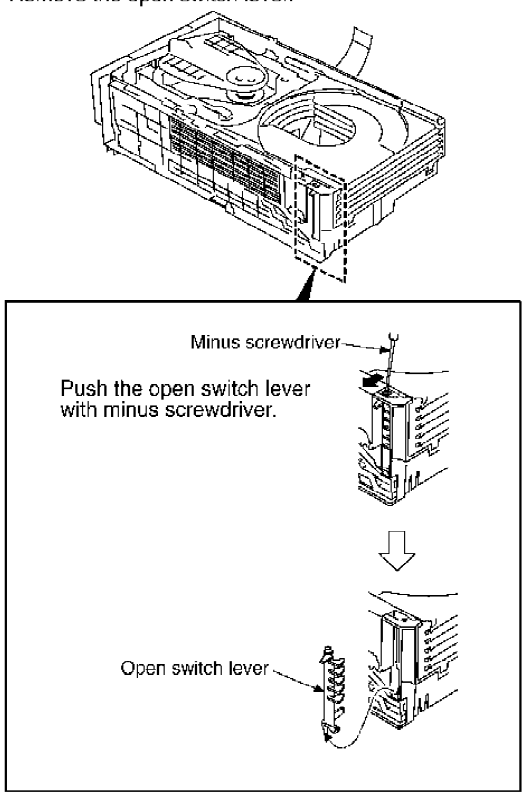

(Step 5)
Release the claw, and then remove the speed up lock.

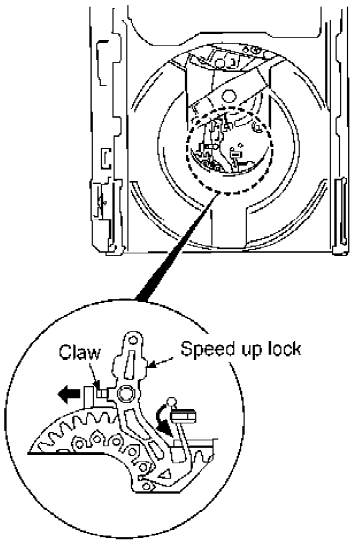

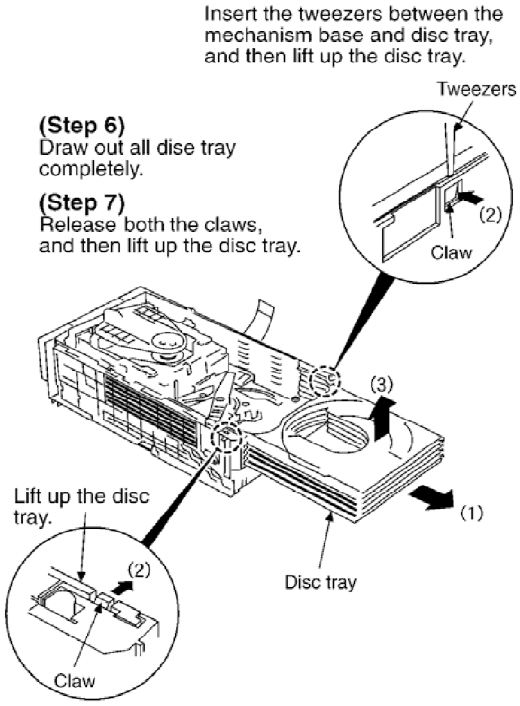
Insert the tweezers between the mechanism base and disc tray, and then lift up the disc tray.
Tweezers
(Step 6)
Draw out all dise tray completely.
(Step 7)
Release both the claws, and then lift up the disc tray.
(2)
Claw
(3)
(1)
Lift up the disc tray.
(2)
Claw
Disc tray

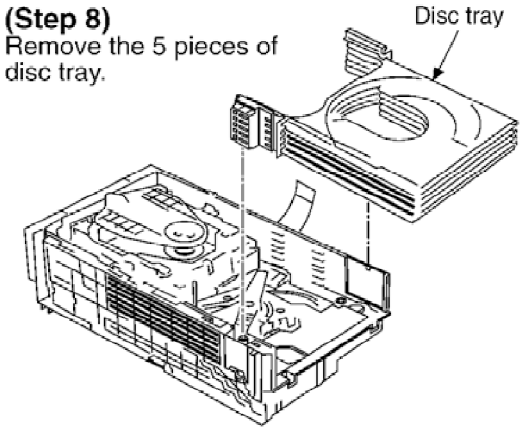
(Step 8)
Remove the 5 pieces of disc tray.
Disc tray

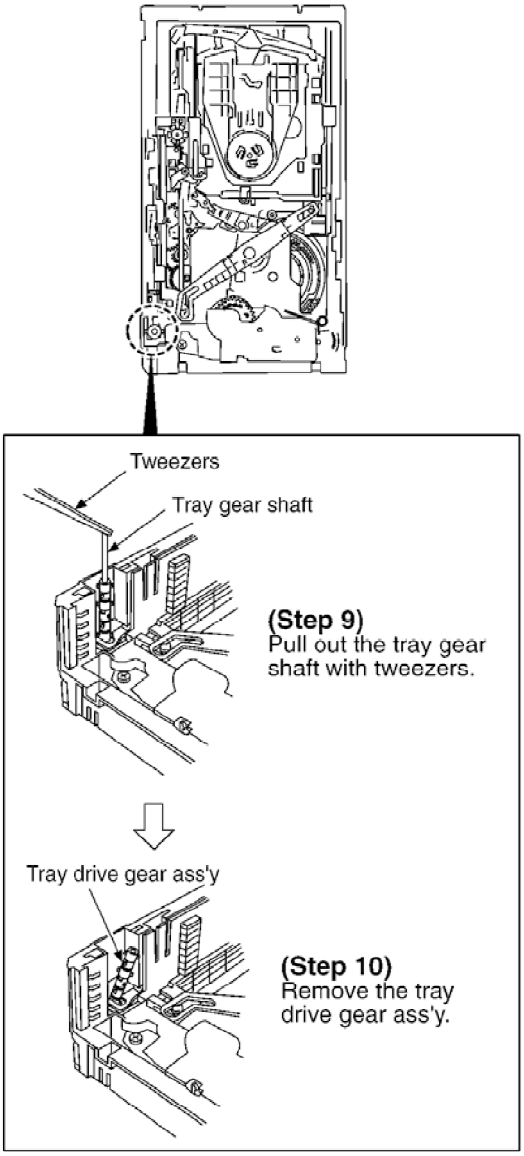

12.24.6. Replacement for the traverse deck

- Follow the (Step 1) - (Step 6) of Item 12.2.
- Follow the (Step 1) - (Step 4) of Item 12.3.
- Follow the (Step 1) - (Step 4) of Item 12.5.
- Follow the (Step 1) - (Step 4) of Item 12.8.
- Follow the (Step 1) - (Step 3) of Item 12.13.
- Follow the (Step 1) - (Step 4) of Item 12.16.
- Follow the (Step 1) - (Step 10) of Item 12.24.5.

(Step 1)
Confirm the position for lever of UD. rack (R) to remove traverse unit.

(Step 2)
Turn the unit over. (Upside: P.C.B.)

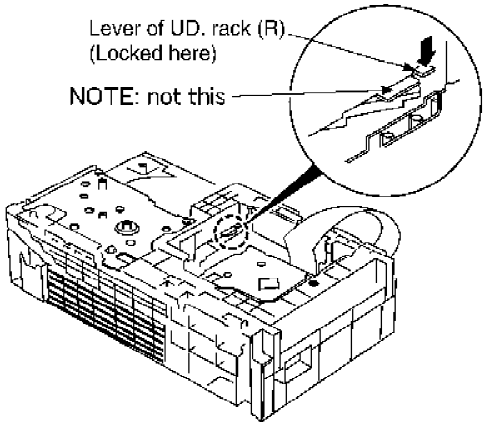

(Step 3)
Turn the unit over again, slide UD. rack (R) while pushing up the lever from the bottom.

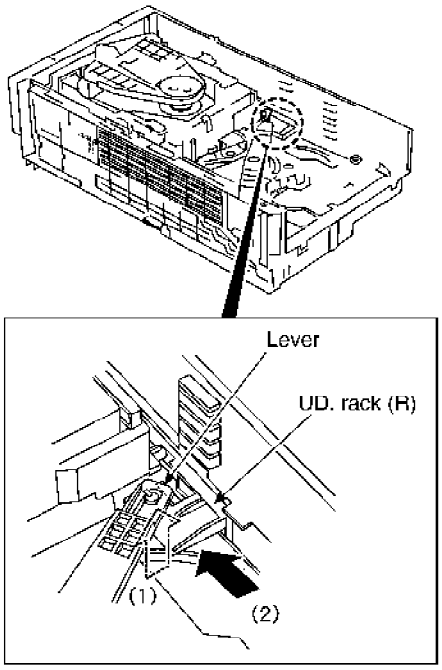

(Step 4)
Remove the traverse unit.

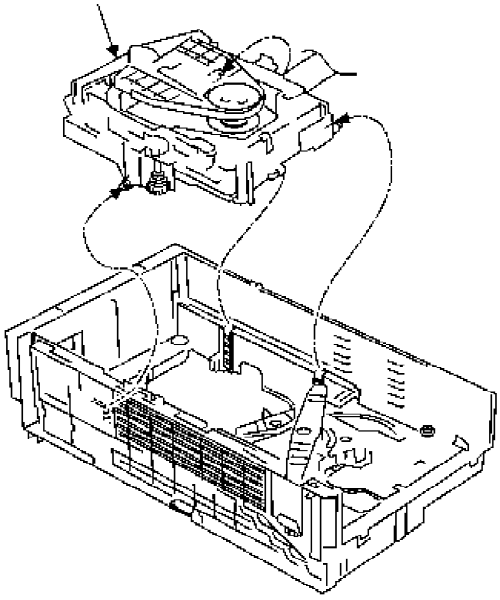

12.24.7. Disassembly for loading unit

- Follow the (Step 1) - (Step 6) of Item 12.2.
- Follow the (Step 1) - (Step 4) of Item 12.3.
- Follow the (Step 1) - (Step 4) of Item 12.5.
- Follow the (Step 1) - (Step 4) of Item 12.8.
- Follow the (Step 1) - (Step 3) of Item 12.13.
- Follow the (Step 1) - (Step 4) of Item 12.16.
- Follow the (Step 1) - (Step 10) of Item 12.24.5.
- Follow the (Step 1) - (Step 4) of Item 12.24.6.

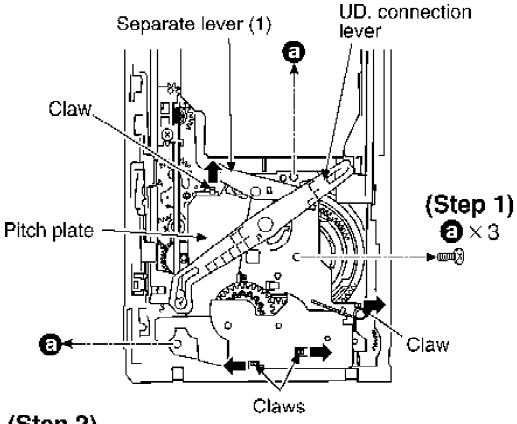

(Step 2)
Release the 4 claws, and then remove the pitch plate together with separate lever (1) and UD. connection lever.

(Step 3)
Remove the speed up gear and hor belt.

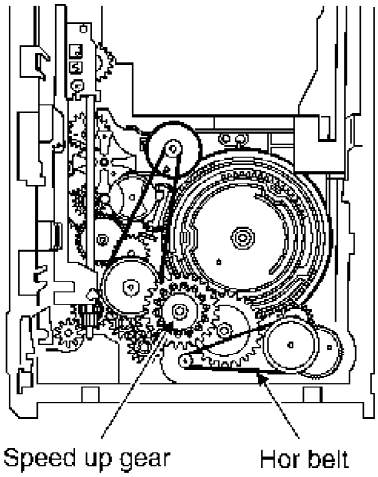

(Step 4)
Remove the reverse gear, hor pulley gear, hor speed down gear (1), hor speed down gear (2) and hor drive gear.

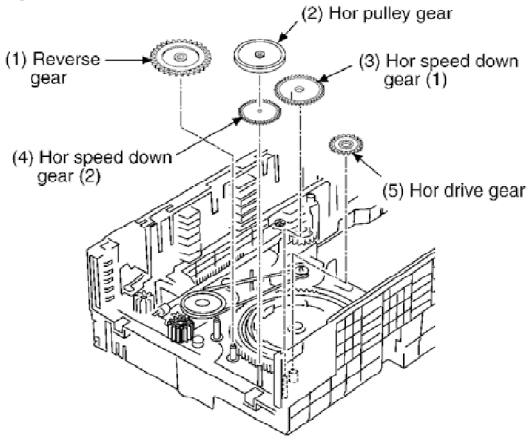

(Step 5)
Remove the UD. belt and tray relay gear.

(Step 6)
Pull out the UD. pulley gear, loosen 2 hooks of the bottom of mechanism bese.

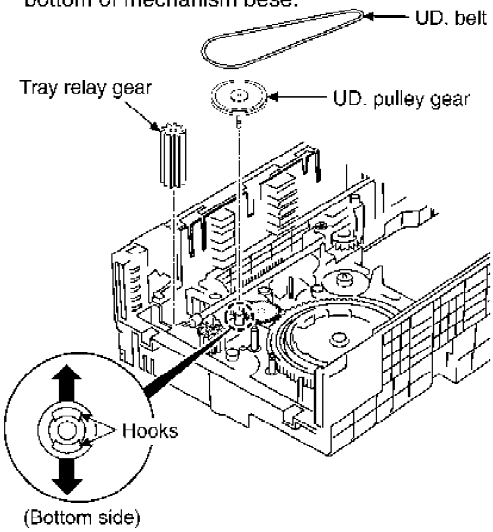

(Step 7)
Remove the 2 hor relay gears and UD. speed down gear No.1.

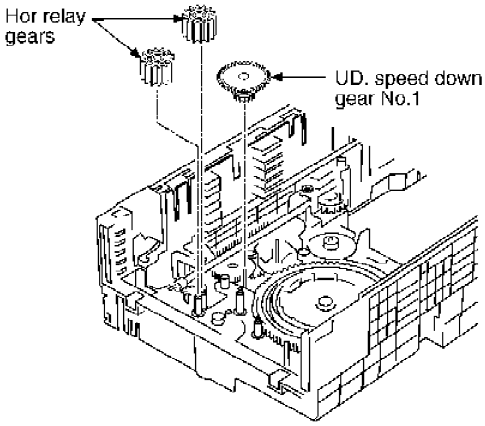

(Step 8)
Remove the main gear and main gear spring.

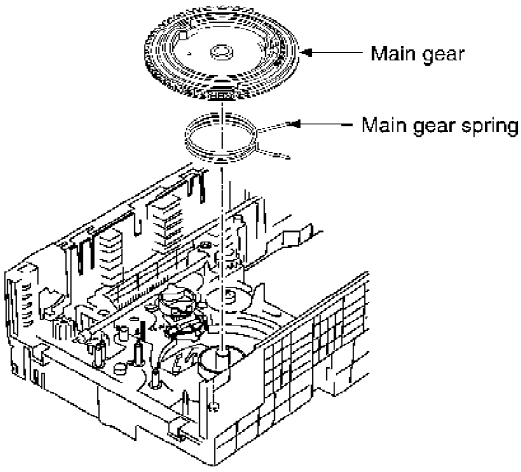

(Step 9)
Remove the change gear.

(Step 10)
Raise the change lever upright, and pull it out of hook.

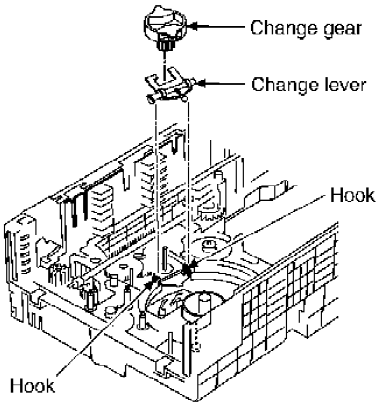

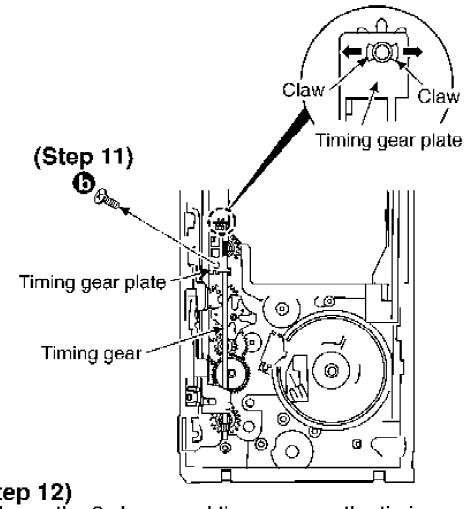

(Step 12)
Release the 2 claws, and then remove the timing gear and timing gear plate.

(Step 13)
Move the UD. rack (L) to backward, and then remove it.

(Step 14)
Remove the UD. rack (R).

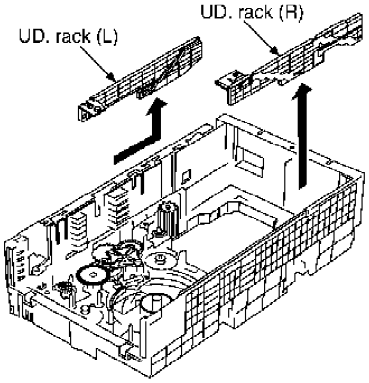

(Step 15)
Remove the 2 gears and load relay gear.

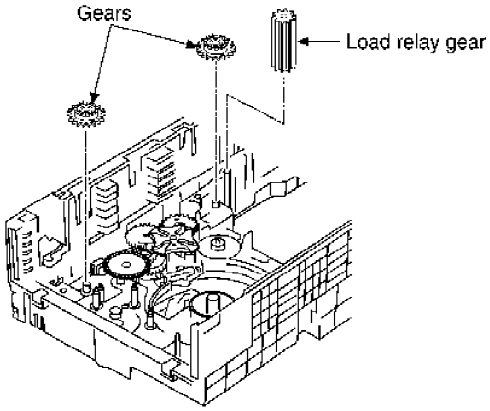

(Step 16)
Pull out the GENEVA gear, loosen 2 hooks of the bottom of mechanism base.

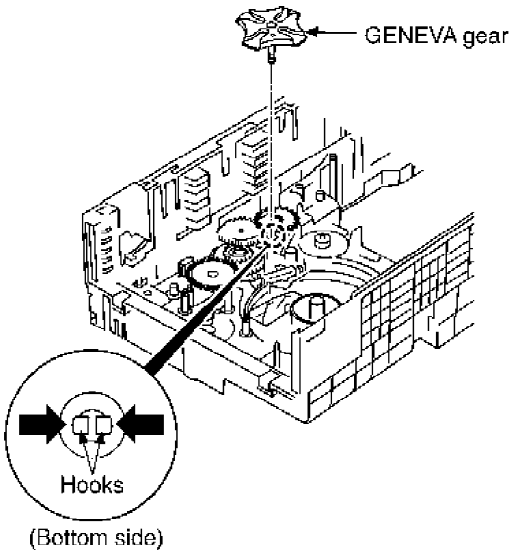

(Step 17)
Remove the UD. speed down gear No.2 and UD drive gear.

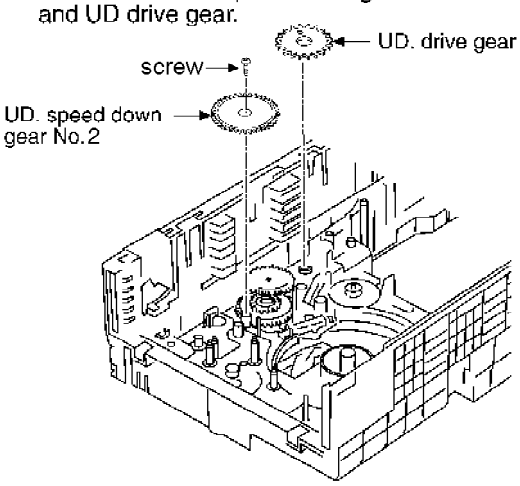

(Step 18)
Slide the select rack to the edge direction of the arrow (1). Push the claw and pull out to arrow (2) while sliding the select rack to the arrow (1).

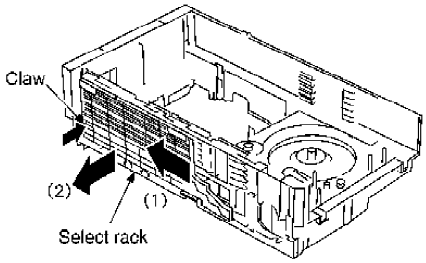

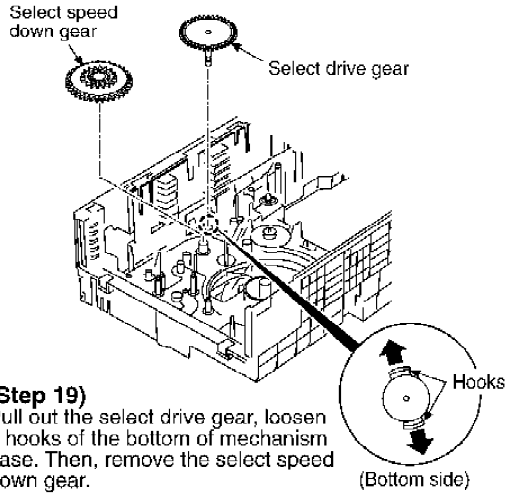

(Step 19)
Pull out the select drive gear, loosen 2 hooks of the bottom of mechanism base. Then, remove the select speed down gear.

(Step 20)
Remove the select guide after sliding upside.

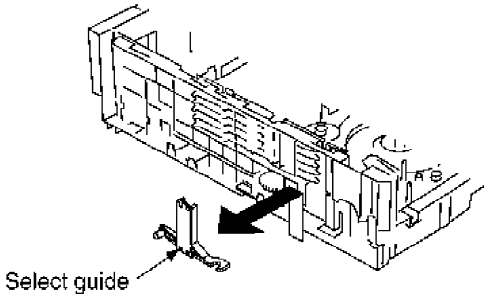

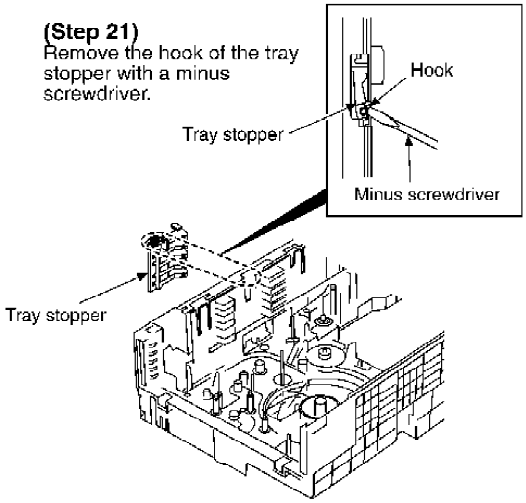

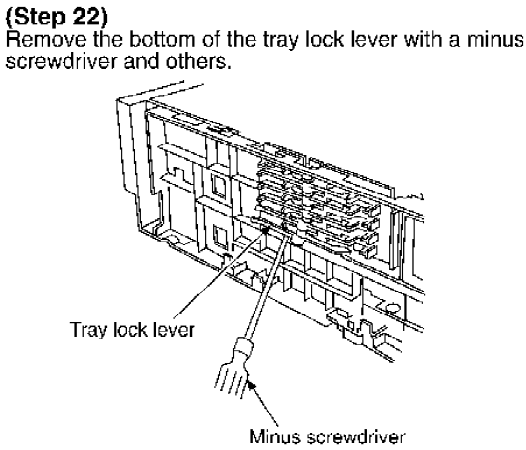

12.25. CR16 MECHANISM ASSEMBLY PROCEDURE

The following specified greases and/or oil must be applied when some specific parts are changed.

1. **Floil grease (VFK1298) : The floil grease must be applied to tray, tray (L) and tray (R).**
2. **Hanarl oil (VFK1700) : The hanarl oil must be applied to any parts with grease other than the said parts.**

- Follow the (Step 1) - (Step 6) of Item 12.2.
- Follow the (Step 1) - (Step 4) of Item 12.3.
- Follow the (Step 1) - (Step 4) of Item 12.5.
- Follow the (Step 1) - (Step 4) of Item 12.8.
- Follow the (Step 1) - (Step 3) of Item 12.13.
- Follow the (Step 1) - (Step 4) of Item 12.16.
- Follow the (Step 1) - (Step 10) of Item 12.24.5.

- Follow the (Step 1) - (Step 4) of Item 12.24.6.
- Follow the (Step 1) - (Step 22) of Item 12.24.7.

(Step 1)
Install the tray lock lever to mechanism base.

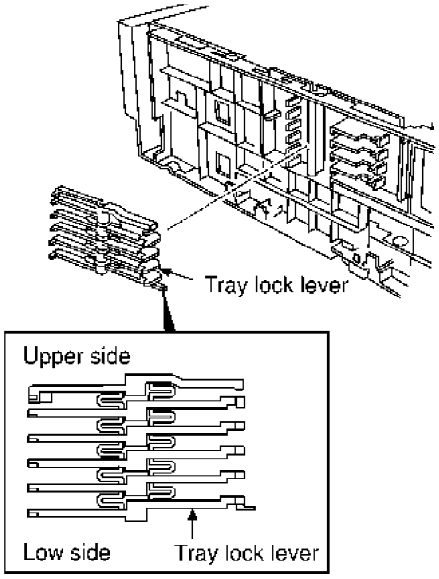

(Step 2)
Push the tray lock lever with a hand and install it.

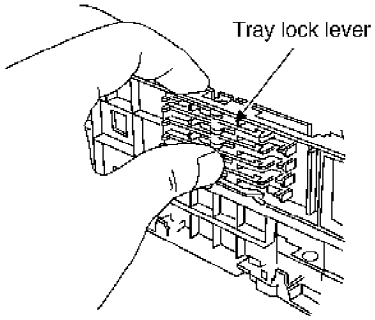

(Step 3)
Install the tray stopper to mechanism bese.

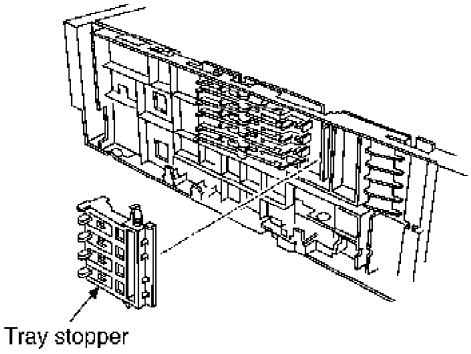

(Step 4)
Push the tray stopper with a hand and install it.

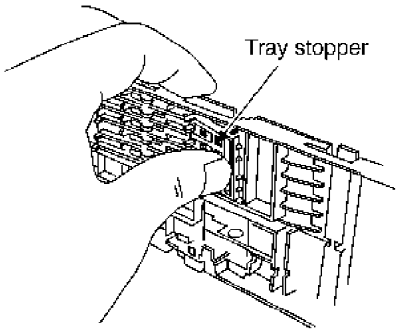

(Step 5)
Insert the select guide with a groove of the mechanism base and move it below.

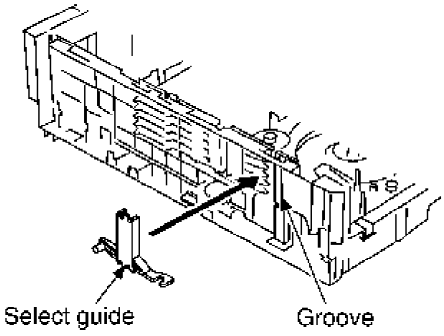

(Step 6)
Install the select speed down gear to mechanism base.

(Step 7)
Install the select drive gear to mechanism base.

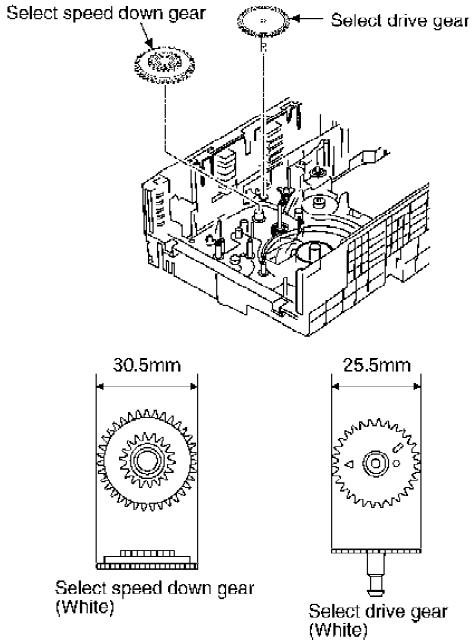

(Step 8)
Fit a mechanism base marking to the rectanguler mark of gear so that the triangle mark can indicate the sideward direction.

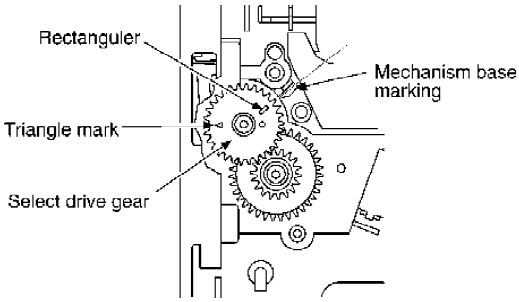

(Step 9)
Install the select rack to mechanism base.
Checking items before the installation.
1. Check select guide is completely in lowest position.
2. Check its phase of select drive gear is correct position.(Rectangle/Trianguler mark)(Refer to Step 8)

1. Put a select rack down with it fitted to its circumference of mechanism base.

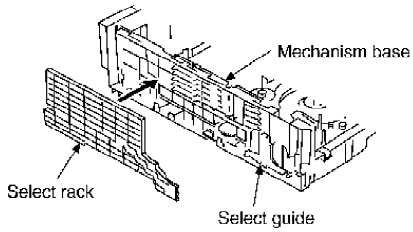

2. Slide the select rack with it's pushing to a little right direction and install it.

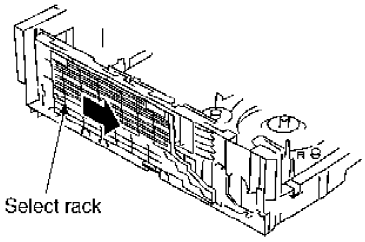

(Figure to see from the inside)

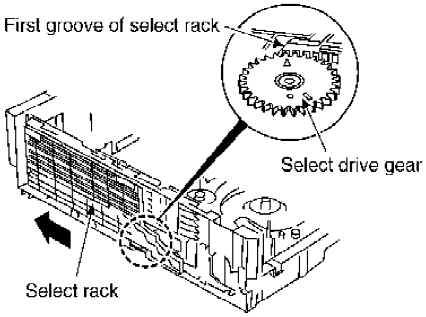

3. Check whether its end of triangular mark is in first groove of select rack, after fixing.
4. After insertion of select rack, continue the following work until the indication that it gose forward. And, all the while it must be checked that select rack is in the extreme end.

5. After insertion the select rack, the marking of select gear has a little gap when it is in the extreme end.

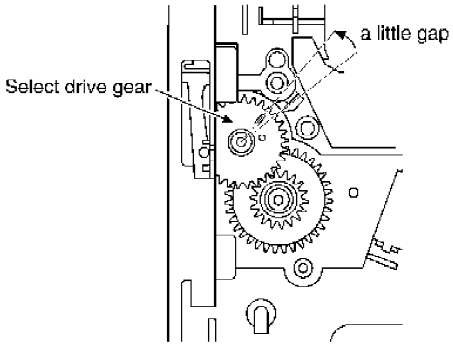

(Step 10)
Install the UD. speed down gear No.2 and UD. speed down gear No.1.

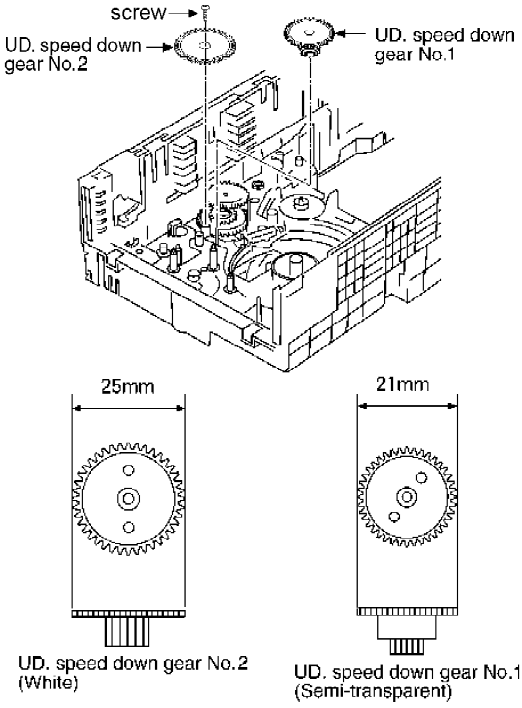

(Step 11)
Install the UD. drive gear to mechanism base.

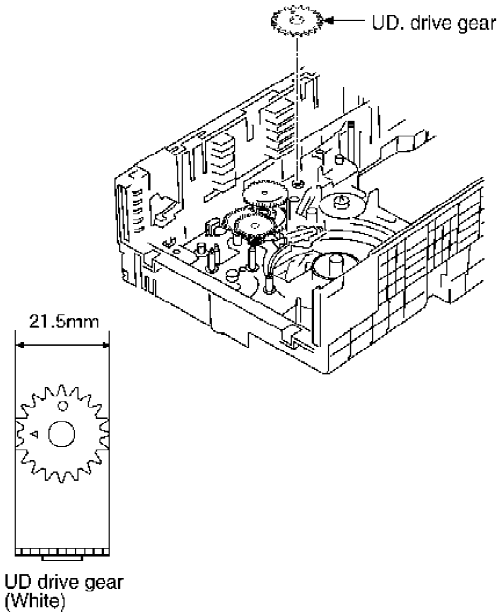

(Step 12)
Insert the UD. drive gear with its marking hole upward.
At that time, its triangle mark should be sideways.

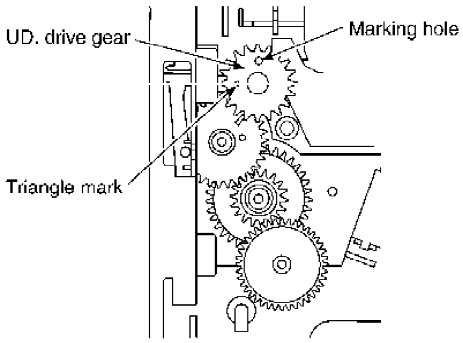

(Step 13)
Insert the GENEVA gear with its marking hole upward,
and fix it by 2 hooks on bottom of mechanism base.
At that time, UD. drive gear mustn't be moved.

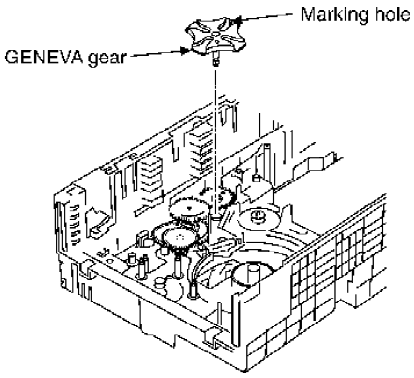

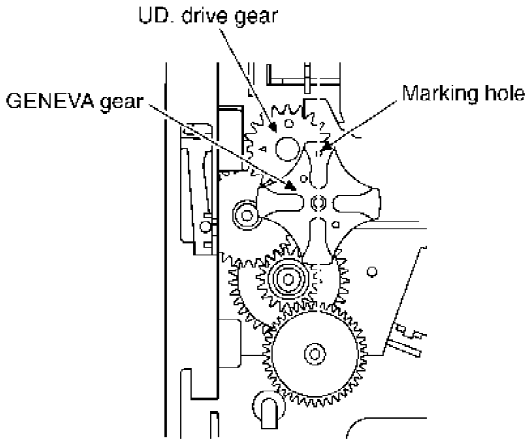

(Step 14)
Install the 2 gears to mechanism base.

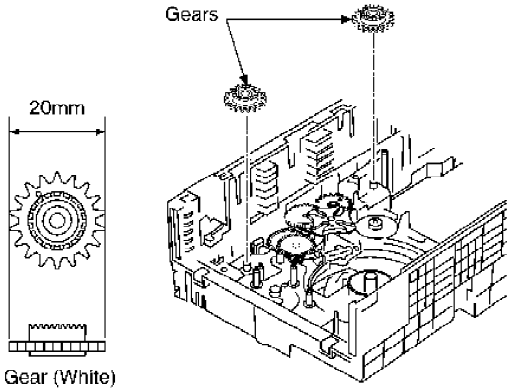

(Step 15)
Insert the UD. rack (R) to (2) from arrow (1).

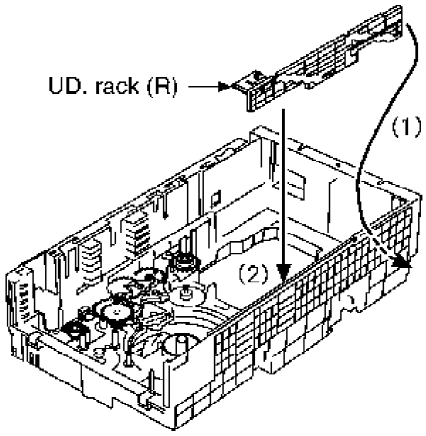

NOTE:
Put a groove of the mechanism base to the UD. rack (R).

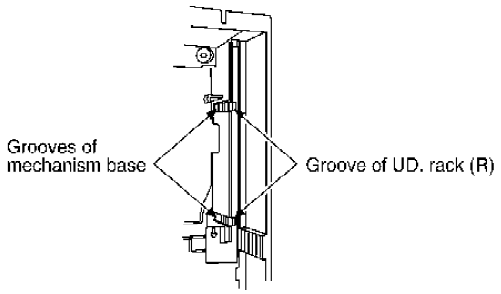

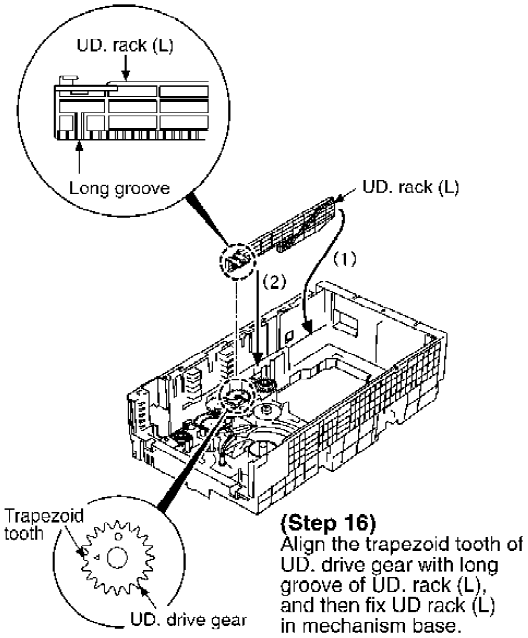

(Step 16)
Align the trapezoid tooth of UD. drive gear with long groove of UD. rack (L), and then fix UD rack (L) in mechanism base.

(Figure to see from the upper side)

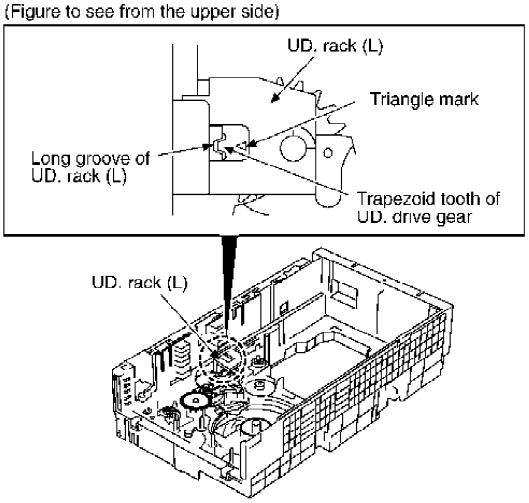

(Step 17)
Install the tray relay gear and 2 hor relay gears.

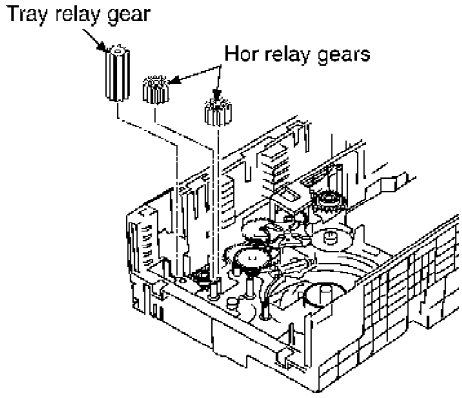

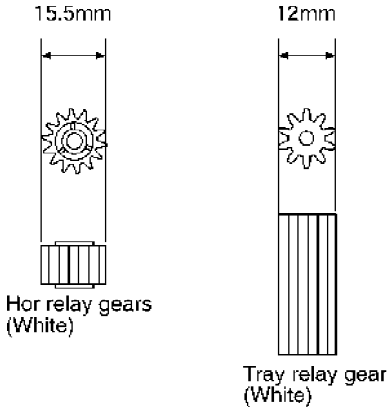

(Step 18)
Install the load relay gear to mechanism base.
(Fit load relay gear with its big hole downward.)

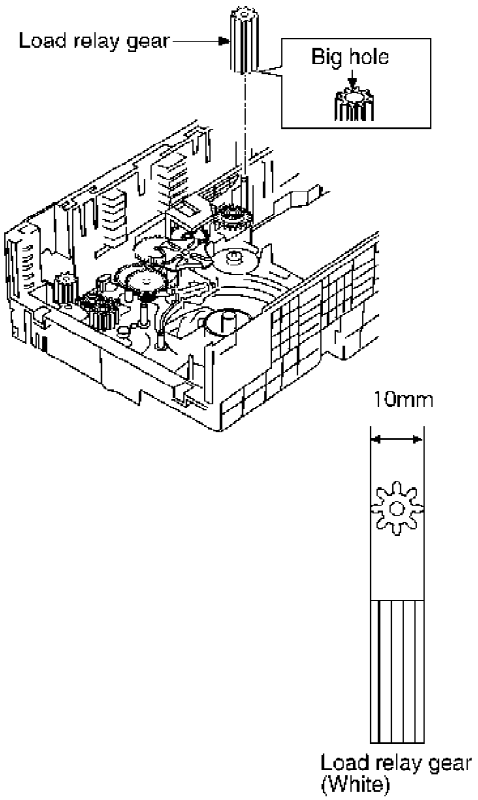

(Step 19)
Put on the top of the timing gear, then, install the timing gear and it's plate.
At that time avoid the UD. rack (L).

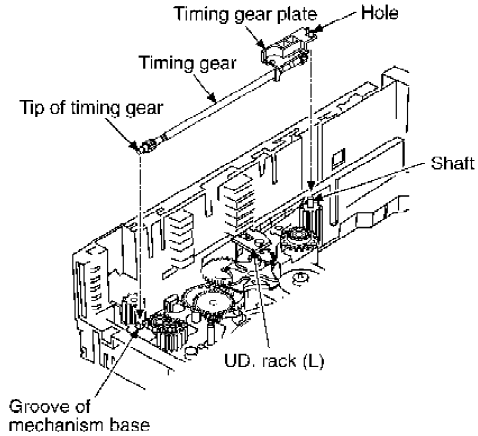

(Step 20)
Fix 2 claws and a screw to fix the timing gear and it's plate.

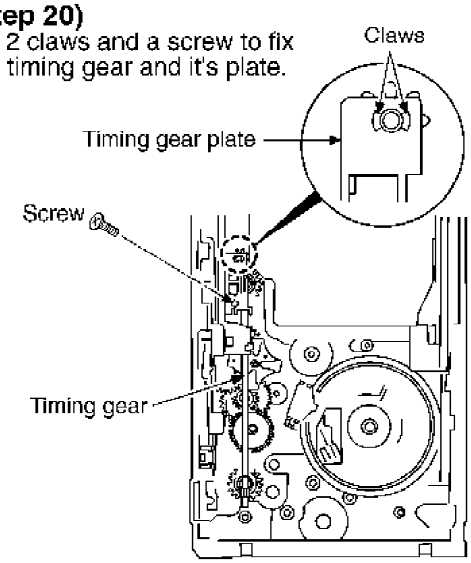

(Step 21)
Install the UD. pulley gear to mechanism base.

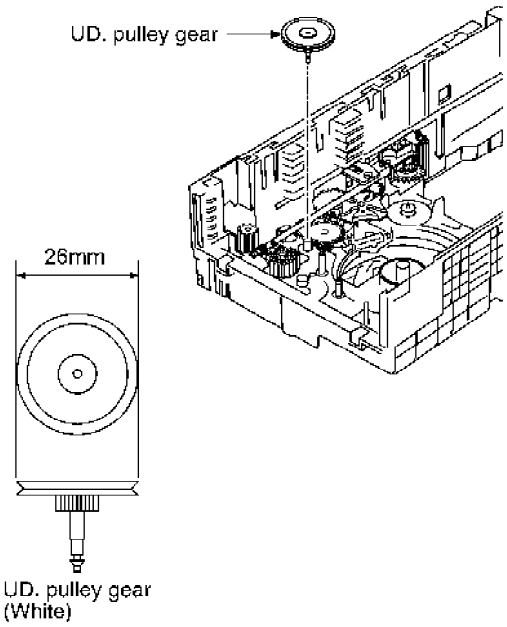

(Step 22)
Insert the change lever with it upright.

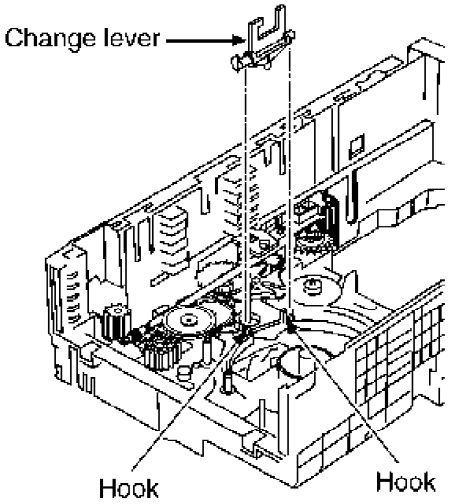

(Step 23)
Be sure the notice of bellow before fixing the change gear.
1. Select track should be in the rear of mechanism base.
2. Its hole of GENEVA gear should turn up.

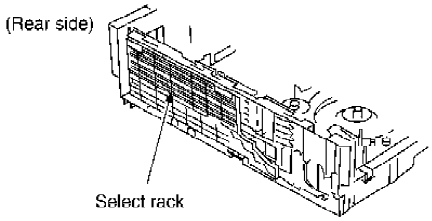

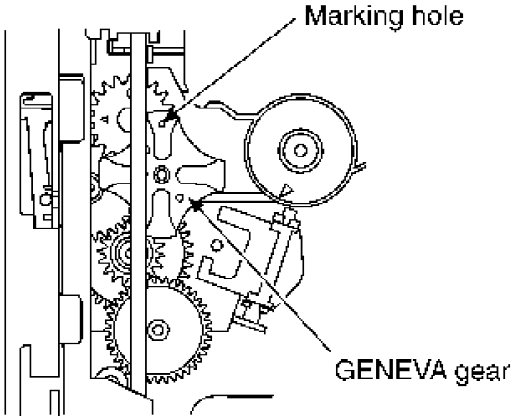

(Step 24)
Install the change gear as insert the change lever into the groove of change gear.

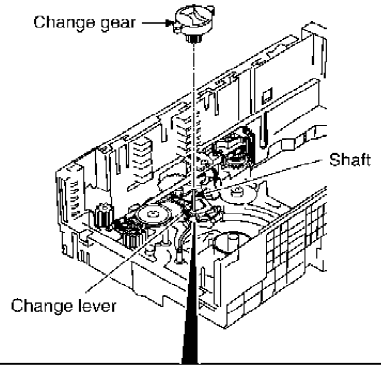

1. Pushing the ◌ part and pull up the change lever 45°.

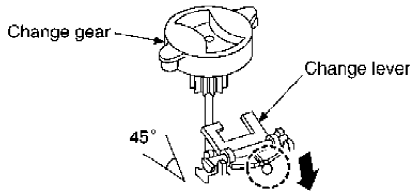

2. Insert the change lever into the groove of change gear.

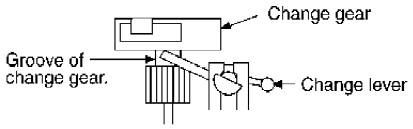

(Step 25)
Put change gear down with projection part of change gear fitted to triangle mark of mechanism base, when fixing change gear.
At that time, check change gear is inserted into the groove of change lever.

(Step 26)
Lastly, turn GENEVA gear clockwise slightly and drop change gear to mechanism base.

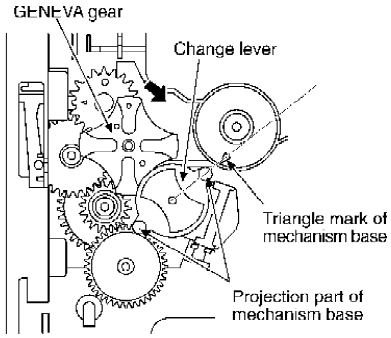

(Step 27)
Move the select rack smoothly forward manually until 2 extreme points of both select track and mechanism base.

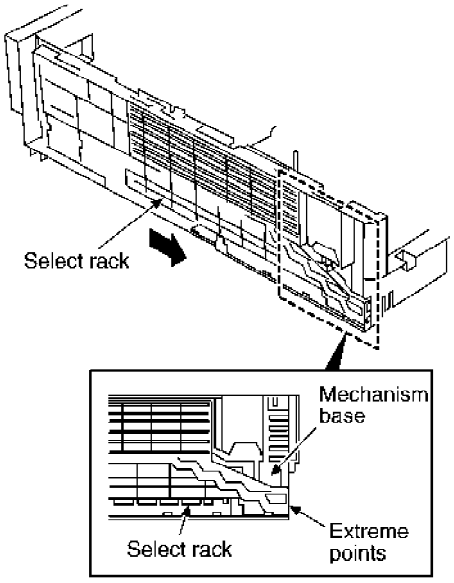

(Step 28)
Install the main gear spring and hor drive gear.

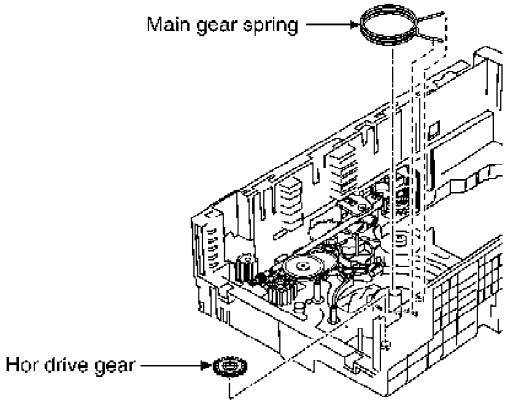

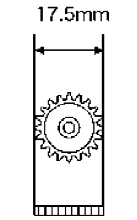

(Step 29)
Don't bring change lever into touch to projection part of main gear, when fixing main gear in mechanism base.

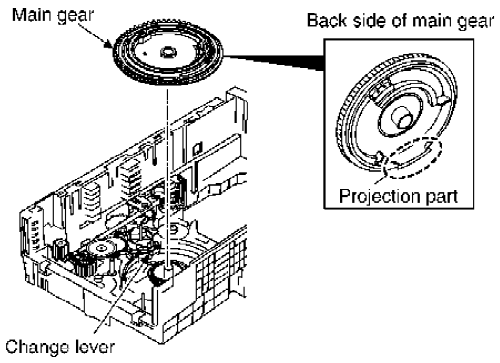

(Step 30)
After that, turn main gear so that 2 holes inside main gear would be in alignment with mechanism base.

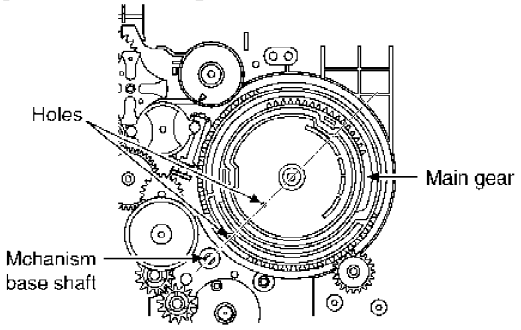

(Step 31)
Install the hor speed down gear (2), hor speed down gear (1), hor pullry gear and reverse gear.

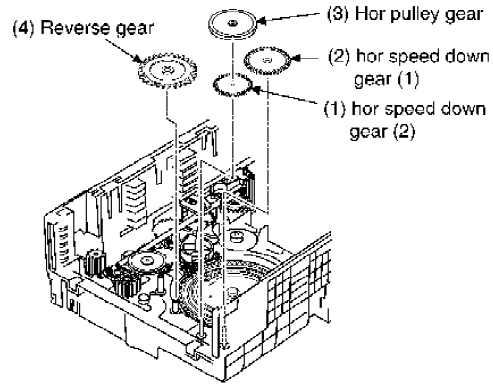

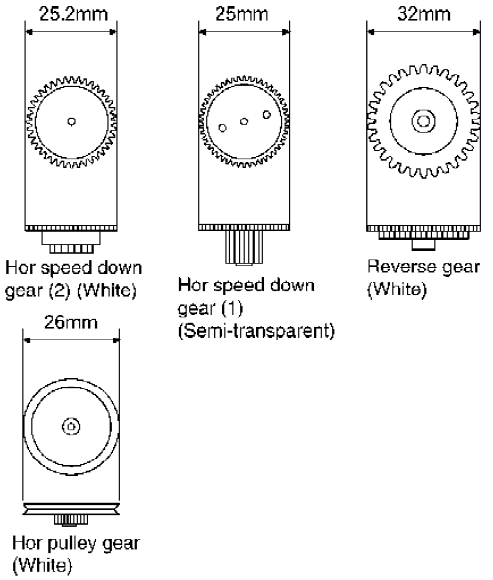

(Step 32)
Install the UD. belt and hor belt.

NOTE:
1. Take care not apply the grease to the belt.
2. Install the belt without twist.

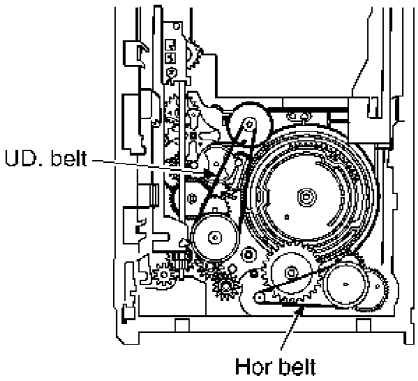

(Step 33)
Install speed up gear to its shaft of mechanism base with 2 fitting.

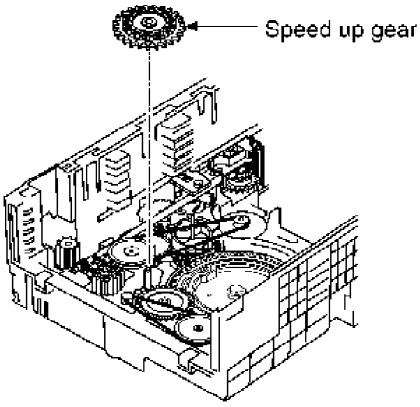

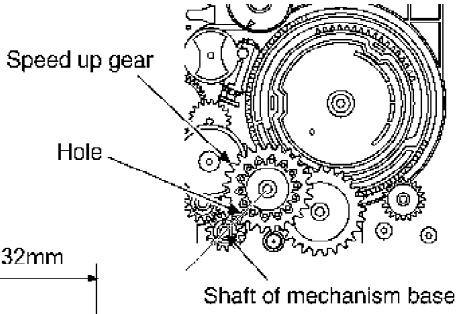

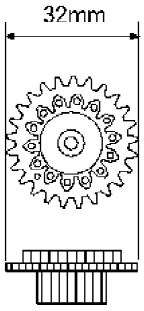

Speed up gear
(White)

(Step 34)
Install the pitch plate. (The 4 claws should be latched.)

(Step 35)
Fix 2 ribs of UD. rack (L) and (R) into groove of both ends of UD. connection lever.

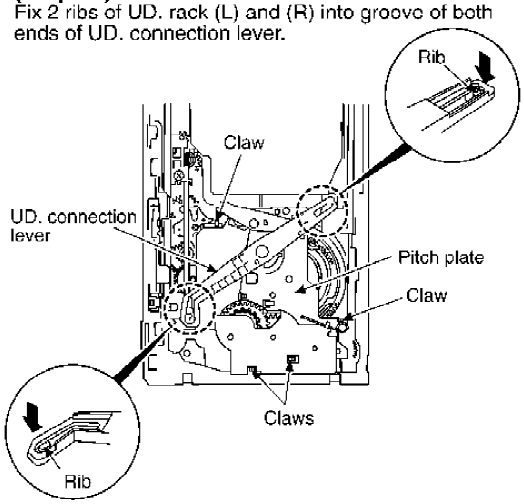

(Step 36)
Fixed it by three screws further.

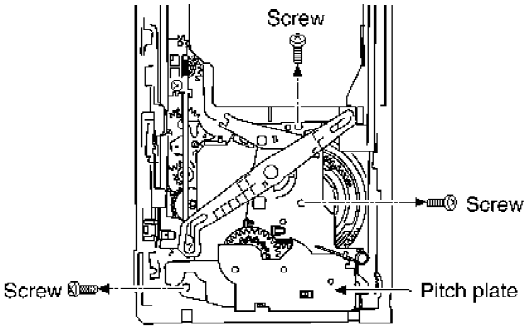

(Step 37)
Be sure the notice of below before fixing the traverse mechanism.

1. Check that 2 holes of both pitch plate and main gear is fitted. (Refer to Fig.1)
   If it's not fitted, put the gear for servicing in the hole of the bottom side and adjust it. (Refer to Fig.2)
2. Check that 2 holed of both pitch plate and speed up gear is futted. (Refer Fig.3)
   If it's not fitted turn the speed up gear to adjust it.

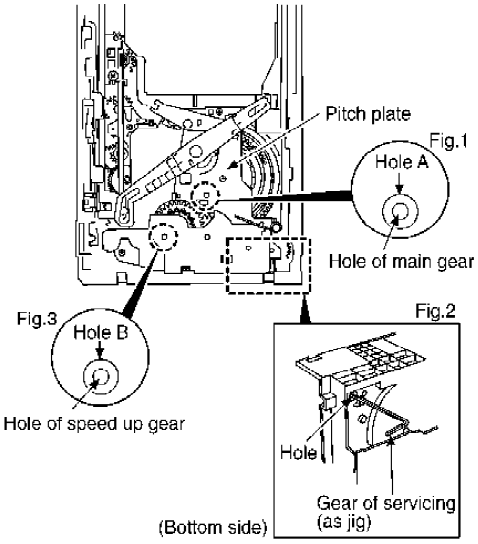

(Step 38)
Turn the separate lever (2) slowly toward left side until it clicks.

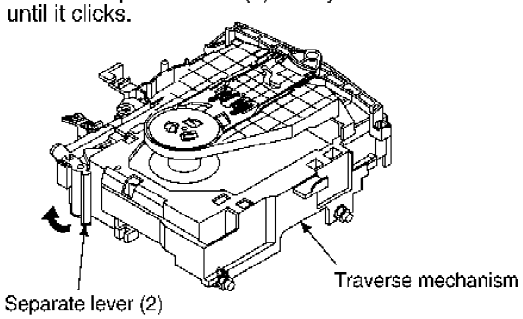

(Step 39)
Fix the left boss into the top groove of the UD. rack (L) and fix 2 bosses into the groove of the UD. rack (R).

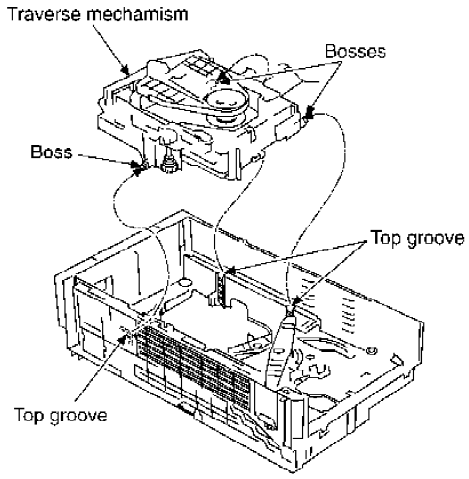

(Step 40)
At that time, fix separate lever (2) into the separate lever (1).

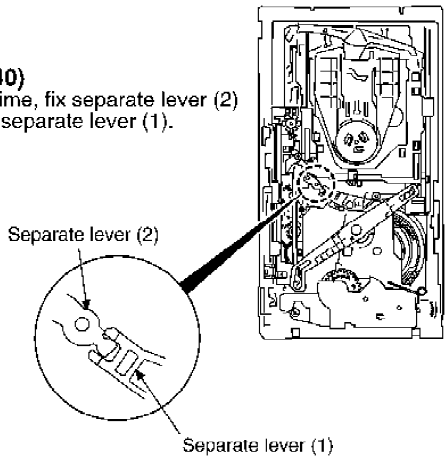

(Step 41)
After the traverse mechanism fixed,
confirm the phase in order below.

1. Check that 2 holes of both pitch plate and main gear is fitted. (Refer to Fig.1)
   If it's not fitted, put the gear for servicing in the hole of the bottom side and adjust it. (Refer to Fig.2)
2. Check that 2 holed of both pitch plate and speed up gear is futted. (Refer Fig.3)
   If it's not fitted turn the speed up gear to adjust it.

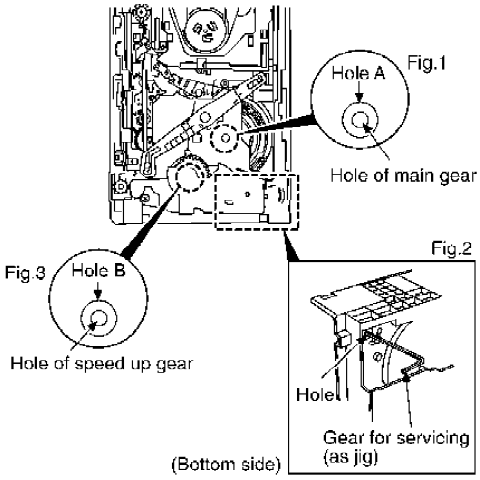

3. In the cog of road gear, the groove with it's cutting halfway set side ward. (Refer to Fig.4)
   Remove the traverse mechanism again when it is not set side ward and install it after adjustment of inserting position.
   NOTE: By this time, do not adjust to rotate the road gear.

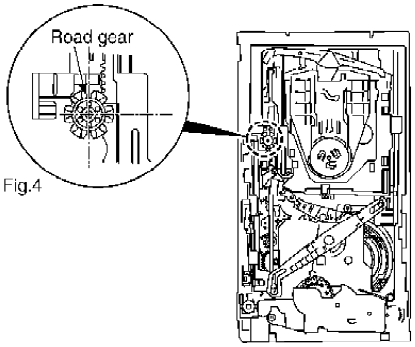

(Step 42)
After insertion of traverse mechanism, pull the UD. rack (R) on this side that each phase is "OK" and then lock the traverse mechanism.

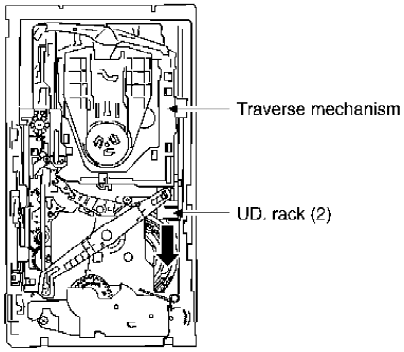

(Step 43)
Install the tray drive gear to select guide.
(Install the top rib of the tray drive gear with side ward.)

NOTE:
Confirm the each phase surely before install the tray drive gear. (Refer to Step 41).

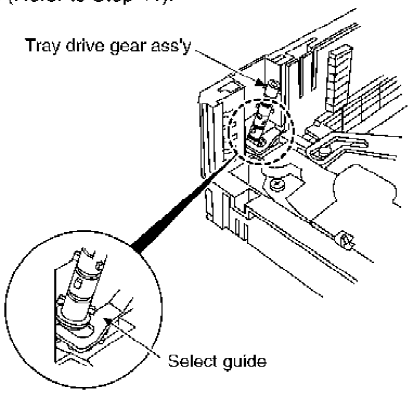

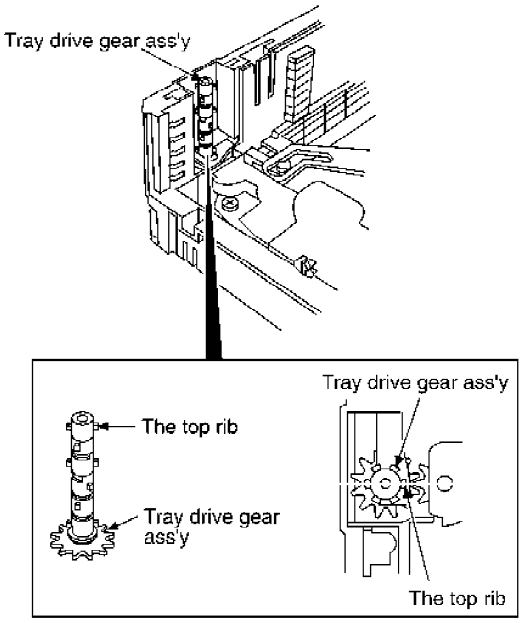

(Step 44)
Insert the tray gear shaft.

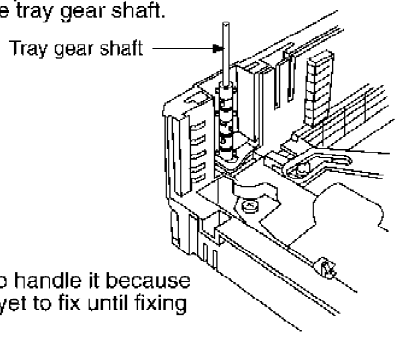

NOTE:
Be careful to handle it because the shaft is yet to fix until fixing top cover.

(Step 45)
Move the tray guide (R) and (L) to direction of arrow that fixed (stopped) it and install 5 pieces of disc tray.

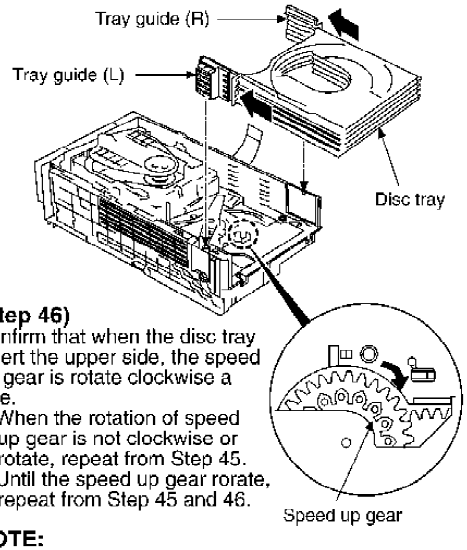

(Step 46)
Confirm that when the disc tray insert the upper side, the speed up gear is rotate clockwise a little.
- When the rotation of speed up gear is not clockwise or rotate, repeat from Step 45.
- Until the speed up gear rorate, repeat from Step 45 and 46.

NOTE:
While keeping all postion, install 5 pieces of disc tray.

(Step 47)
Insert 5 pieces of disc tray at the same time until it's stop.

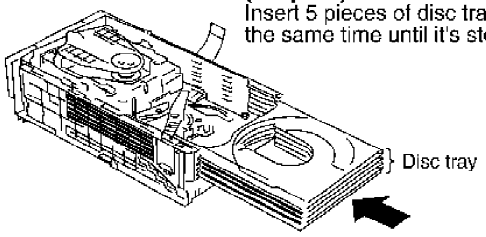

(Step 48)
Turn the traverse side 180°.

(Step 49)
While install the tip of speed up lock beween tray (No.1) of the most lower side and pitch plate for the time being.
(Do not to insert the cog of speed up gear), insert it to boss.

NOTE:
At that time, do not move the tray.
(See the tray the most front side)

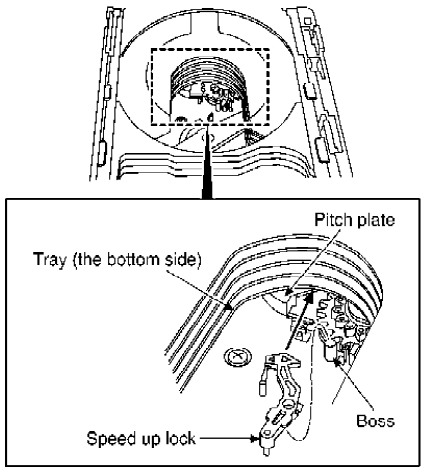

(Step 50)
Insert the rib of speed up lock into a groove of main gear, and lock it with 2 claws.

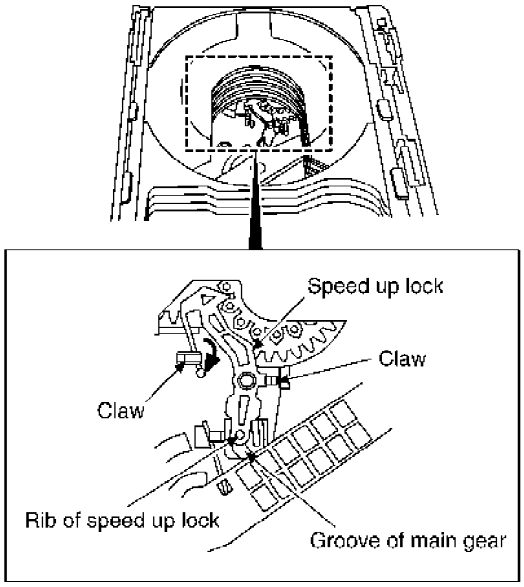

(Step 51)
Move the bottom tray to the arrow while pushing the top of the speed up gear. And insert it to a cog of the speed up gear.

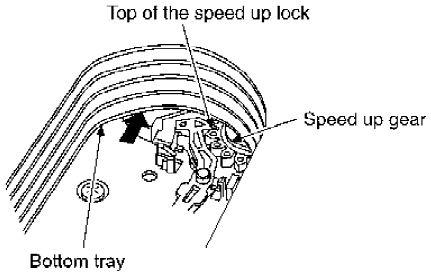

(Step 52)
Install the open switch lever.
(Put the boss into the hole of the mechanism base.)

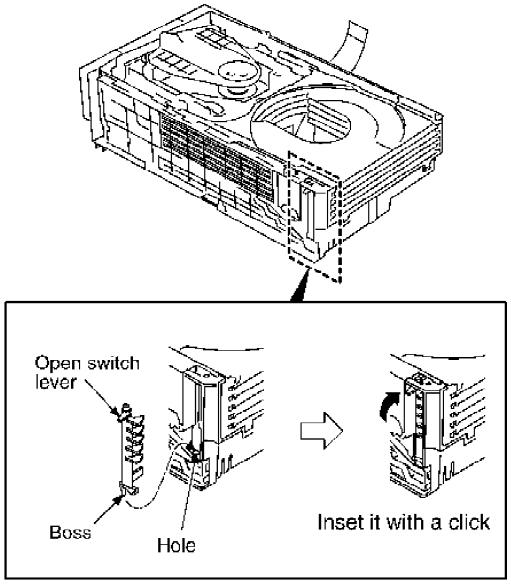

(Step 53)
Install the top cover.
Fix it into hooks and slide direction to the arrow.
NOTE:
The claw should be latched.

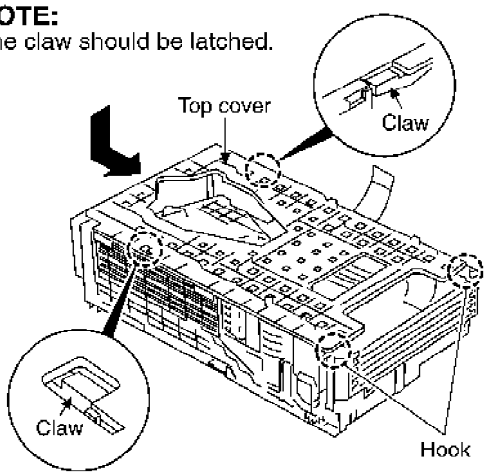

12.26. Disassembly of traverse mechanism

- Follow the (Step 1) - (Step 6) of Item 12.2.
- Follow the (Step 1) - (Step 4) of Item 12.3.
- Follow the (Step 1) - (Step 4) of Item 12.5.
- Follow the (Step 1) - (Step 4) of Item 12.8.
- Follow the (Step 1) - (Step 3) of Item 12.13.
- Follow the (Step 1) - (Step 4) of Item 12.16.

Step 1
Shift ribs of both side to the arrow direction.
(A vertical rack (R) slides and groove opens)

Step 2
Remove CD traverse deck.

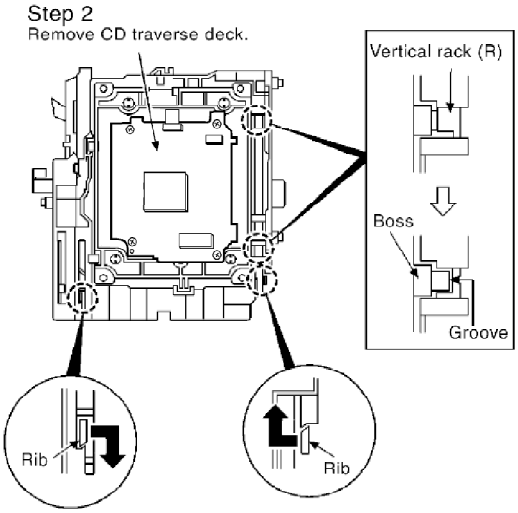

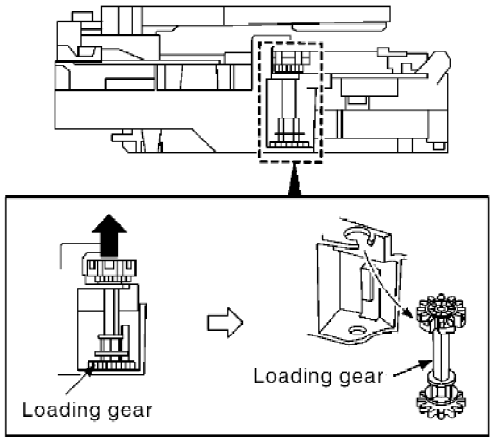

Step 3
Lift a loading gear slightly and pull out.

Step 4
Fixing lever to the arrow direction, rotate a traverse.

Step 5
Remove catch and take out a clamp guide.

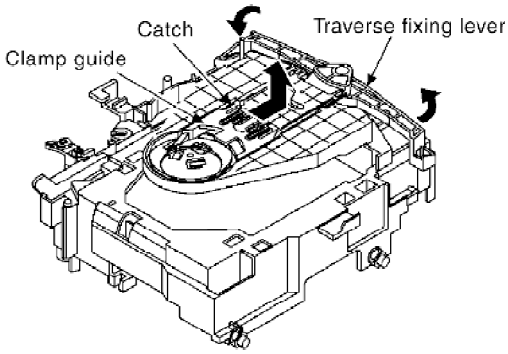

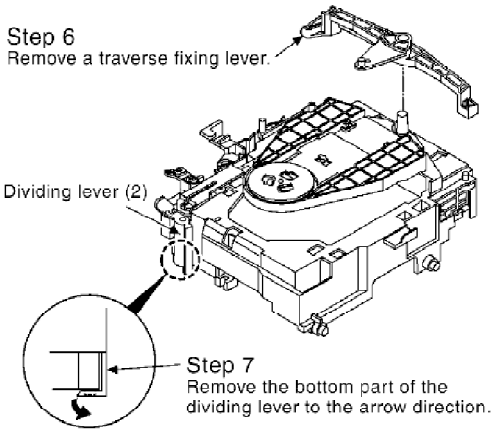

Step 8
Slide a traverse sliding plate to the arrow direction (1), and shift a rib to the arrow direction (2).

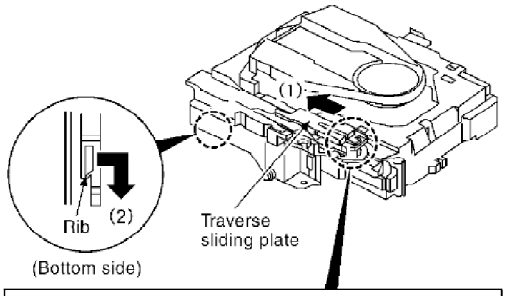

Step 9
Shifting a traverse sliding plate slightly and rotate a tray change lever.

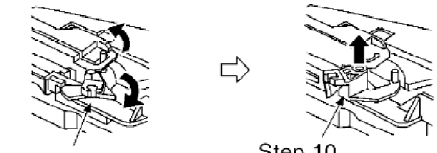

Step 10
Remove a tray change lever.

Step 11
Holding the catch down, slide a traverse sliding plate to the arrow direction and remove it.

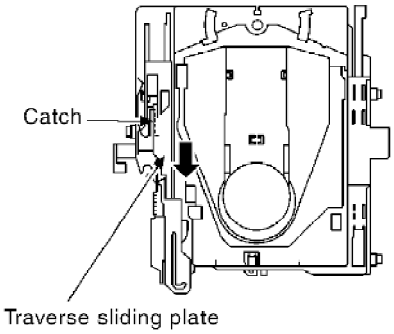

12.27. Handling of cassette tape jam

- Follow the (Step 1) - (Step 6) of Item 12.2.

Step 1
If the cassette tape is not ejected due to twining around capstan or pinch roller during playing or recording, rotate a flywheel **F** to the arrow direction to remove twined tape.

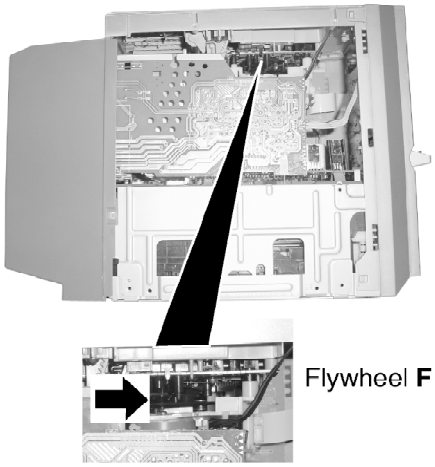

Step 2
Push the lever to the arrow direction, open the cassette cover and take out the cassette tape.

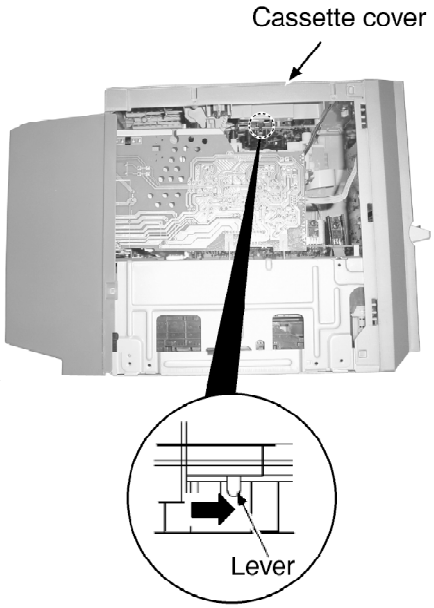

13. Service Positions

13.1. Checking procedure

Note:
For the disassembling procedure, see the section 12.

13.2. Checking the major P.C.B.

1. Disassembly of Side Panel L & R
2. Disassembly of Top Cabinet
3. Disassembly of Deck Mechanism and Tape Eject P.C.B.
4. Disassembly of Front Panel
5. Disassembly of Panel P.C.B.
6. Disassembly of Switch P.C.B.
7. Disassembly of Rear Cabinet
8. Disassembly of Tuner Pack
9. Disassembly of Harmonic Bass P.C.B.
10. Disassembly of Component Video P.C.B.
11. Disassembly of Speaker P.C.B.
12. Disassembly of Main P.C.B.
13. Disassembly of Transformer P.C.B.
14. Disassembly of Power P.C.B.
15. Disassembly of DVD Mechanism

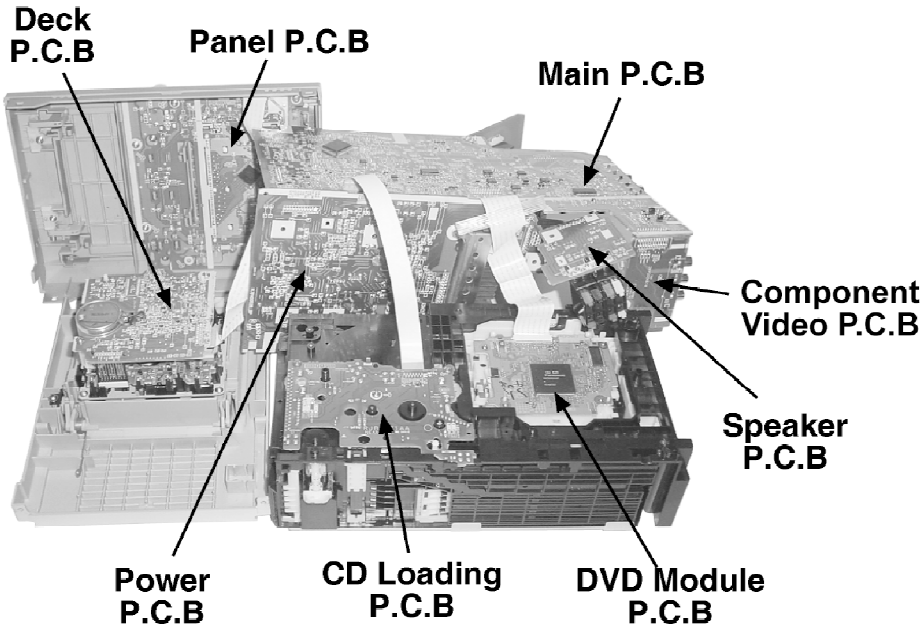

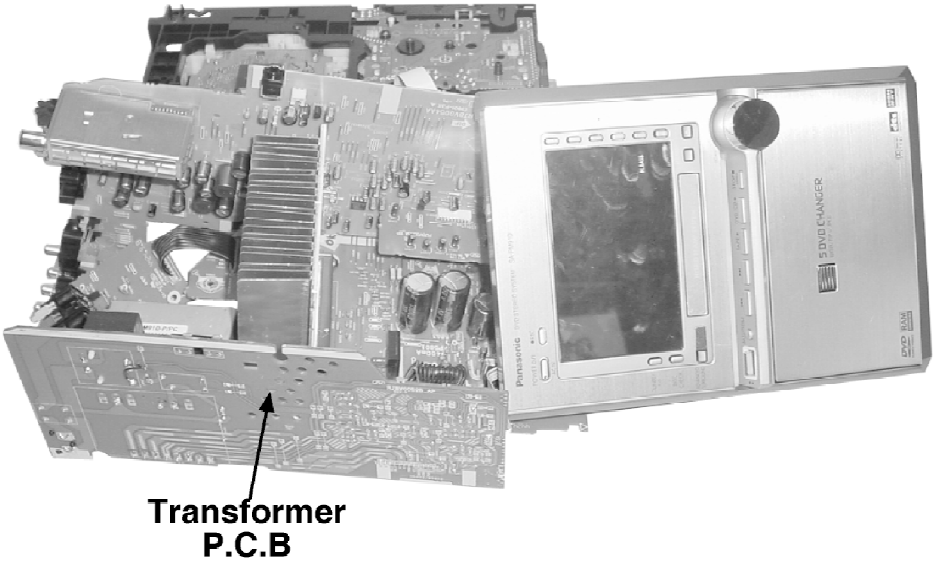

14. Self-Diagnosis Function

This unit is equipped with the self-diagnosis function, which displays an error when it occurs, for use during servicing.

14.1. Automatic Displayed Error Codes

14.1.1. Automatic Display Function

For a power unit error, the code is automatically displayed.

F61:

Automatically displayed on the LCD of the player.

Fig. 14-1

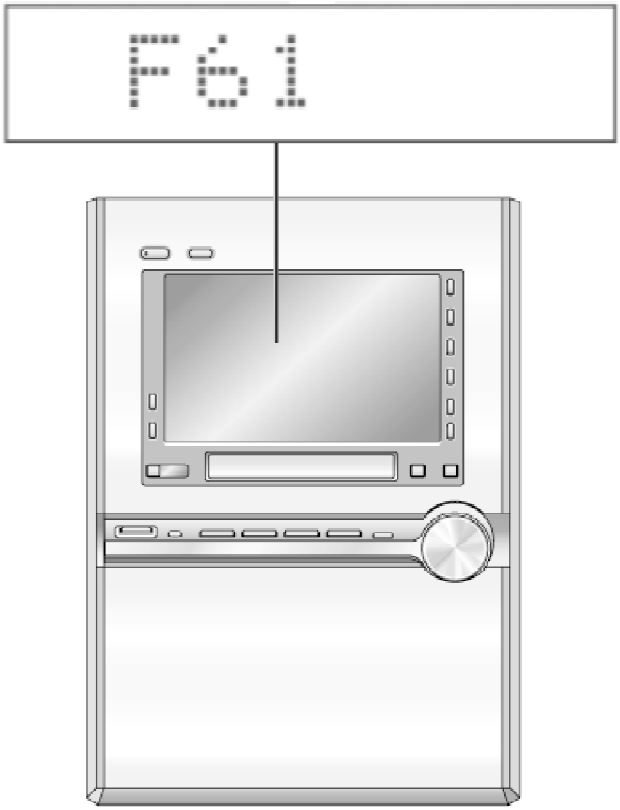

14.1.2. Re-Display

- For F61 Display
- When the code, F61 is displayed, the power is automatically turned off.
- The code, F61 is displayed for three seconds, and then the current time appears.
- To retrieve the code, turn on the power button so that the code F61 appears, however, is switched to time display after three seconds, and the power is automatically turned off.
- For F76 Display
- The abnormalities of an output or abnormalities in the power supply of POWER AMP IC.

14.1.3. Description of Error Code

14.1.3.1. F61

- State, Condition

  When the power is turned on, the unit is automatically turned off. The power does not turn on.
- Cause, Troubleshooting

Power circuit system failure and/or direct current flown to speaker terminal / Identify the cause and replace with new parts.

14.1.4. Setting of Self-Diagnostic (Test Mode)

a) Turn on power for unit.
b) Select DVD/CD Mode. Ensure no disc is inserted in the unit.
c) Press and hold [STOP] and [H.BASS] button for at least 2 seconds. It enters into test mode.
d) Press [POWER] button on the main unit or remote control to exit test mode.

14.2. Memorized Error Codes

14.2.1. Activating Self-Diagnosis Function and Displaying Method

1. **Turn on the power.**
2. **Select DVD/CD function. With no DVD/CD inserted in the player, press and hold down the [STOP] button for at least two seconds, and press the [0] button on the remote control for at least two seconds in order to display "DVD_xxx ".**
3. **Press the [STOP] button. If a memorized error is detected, the result of self diagnosis is displayed. (Ex.: H15) / If several errors are detected, press the [STOP] button to display each.**

Fig. 14-2

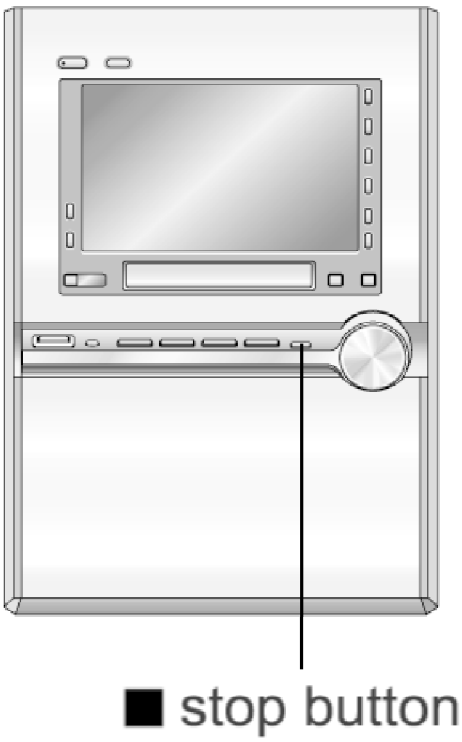

14.2.2. Re-Display

- Press the power button to turn off the power, and then turn on the power.
- The details of self diagnosis are stored in the unit memory. / To retrieve them, follow the procedure described the above, “Activating Self-Diagnosis Function and Displaying Method”.

14.3. Opecon Version and EEPROM Checksum Display

- Display of Opecon Version and EEPROM checksum if EEPROM exists.
-

1. with EEPROM (verification OK)

012	AB0F
Opecon Version	Check Sum

2. No EEPROM

012	NO
Opecon Version	

3. with EEPROM (verification NG)

012	ERR
Opecon Version	Check Sum

- During check sum display, if any valid remocon code is received, check sum display cancelled.

14.4. Service Mode Table 1

Following modes are available with combinations of the pressed buttons on the player and on the remote controller unit.

Player	Remote controller unit	Usage
■ button	0	Error code display
	5	Tilt adjustment
	6	Region number and broadcasting system check
	7	Built-in program version check
	DISPLAY	DVD laser drive current check
	3	CD laser drive current check
	PAUSE	Writing of laser drive current value after replacement of optical (Do use this function only when optical pickup is replaced.)
	≥10	Initialization of the player (factory setting is restored.) / Used aft replacement of micro-computer and its peripherals and printed board.

14.5. Self-Diagnosis Error Code Description

Code Display	Abnormal Item	Detection Method
F61	Abnormal output or power supply	When DCDET becomes L while operatin PCONT is set to L without usual POWEF processing, and F61 is displayed after G BYE display. Occurrence of abnormality memorized and displayed in the abnorm detection display mode.
H15	OPEN SW	It is memorized if there is abnormal SW operation, and is fail-save operation, an abnormal content is displayed by the se diagnostic mode usually. / Abnormal SV detected in the abnormal detection mod
H16	CLOSE SW	
CD F28	The DISC loading is abnormal	Memory when switch is not changed ev exceeds it to time of fail safe time when horizontally operating toward PLAY pos doesn't enter state of target. / When me begins to operate next time, initializatio Only when backup data is cleared clearl error No. when it compels clearly or pov supply start-up.
CD F29	The DISC unloading is abnormal	
CD F27	DOWN SW is abnormal	
CD F22	Mechanism is loading motor/abnormal	

14.6. DVD/CD Self-Diagnosis Error Code Description

Abnormal display	The error is detailed
U11	Focus servo failure
H01	Tray loading failure
H02	Spindle servo failure
H03	Traverse motor failure
H04	Tracking servo error
H05	Seek timeout failure
F010	A specified value is larger than the Parental value of a specified country.
F020	There is no TT_SRPT. (RLBN is 0.)
F021	The number of TT_SRP is 0.
F022	A specified value is larger than the number of TT_SRP.
F023	There is no SRP corresponding to VTSN or VTS_TTN.
F024	A specified value is larger than TT_SRP.PTT_Ns.
F030	The number of TTU_SRP is 0.
F031	A specified value is larger than the number of TTU_SRP.
F040	SRP1 or more is 0.
F041	The number of PGCI_SRP is 0.
F042	A specified value is larger than the number of PGCI_SRP.

Abnormal display	The error is detailed
F043	There is no PGCI_SRP corresponding to Menu ID.
F050	The number of TMAP_SRP is 0.
F051	A specified value is larger than the number of TMAP_SRP.
F052	Specification TMAP_SA is 0.
F053	The number of MAP_EN is 0.
F060	There is no PGMAP in PGC though C_POSIT exists.
F061	The number of PG in PGC is 0 though C_POSIT exists.
F062	A specified value is larger than the number of PG in PGC.
F063	There is no C_PBIT in PGC though C_POSIT exists.
F064	The number of PG in PGC is 0 though C_POSIT exists.
F065	Specification Cell number is 0.
F066	A specified value is larger than the number of Cell in PGC.
F067	It should be a block cell.
F070	It is not NV_PCK data.
F080	There is no Cell number under the retrieval.
F0E0	The PGC control file for the guide of the user ..DFD.. cannot be eliminated.
F0E1	There is no DFD interchangeable type with DFD main microcomputer. It is not to download it.
F0E2	DFD starting download PGC reproduction error
F0E3	DFD download completion waiting PGC reproduction error
F0E4	AVDEC when DFD is downloaded
F0E5	Farm file lead error when DFD is downloaded
F0E6	Falsification check error of firmware that reads DFD
F0F0	There is no farm file and it downloads it DFD unnecessary.
F0F1	There is no firmware corresponding to the DFD download condition and it is unnecessary.
F103	Illegal Highlight Position
F4FF	There was no ACK though the compulsion initialization demand was done to I
F500	DSC Error
F501	DSC Not Ready Error
F502	DSC Time Out Error
F503	DSC Communication Failure
F504	The DSC data slice offset adjustment is abnormal.
F505	DSC Attention Error
F506	Media cannot distinguish. (It is invalid media.)
F600	Administrative information cannot be acquired by the recovery error.
F601	Irregular sector ID demand
F602	LEAD-IN information cannot be acquired by the recovery error.
F603	KEY_DET cannot be acquired by the recovery error.
F610	ODC loss of control
F611	CRCOK doesn't go out during the fixed time. (CD system)
F612	CRCOK doesn't go out during the fixed time. (DVD system)

Abnormal display	The error is detailed
F620	Laser protection"State of high temperature"
F621	Laser protection"State of circuit breakdown"
F700	MBX Overflow
F701	Message Command Not Complete Error
F702	Message Command Changed
F880	The task number is inapposite.
F890	It tried to transmit the message while transmitting to the AV task.
F891	The message to the AV task was not able to transmit. (mailbox overflow etc.)
F8A0	The message command is inapposite.
F893	Flash ROM is falsified.
F894	EEPROM, it is not normal.
F895	The language destination is abnormal.
F896	It is a model setting that doesn't exist.
F897	Cannot it written and the following initialization been done.
F0BB	DVD-R cannot reproduce.
F0BC	DVD-RAM cannot reproduce.
F0BD	CD-R cannot reproduce. Reservation..display.
F0BE	CD-RW cannot reproduce. Reservation..display.
F0BF	Because a physical layer cannot distinguish, it is not possible to reproduce.
F0C0	It is not DVD Video but it cannot be a reproduction.
F0C1	It prohibits it for the prohibition region code.
F0C2	Reproduction prohibition of PAL
F0C3	All title reproduction prohibition of Parental setting
F0C4	Because it is PHOTO CD format, it prohibits it.
F0C5	Because it is CDROM without VCD/CD:CD-DA, it prohibits it.
F0D0	Length error of retrieved file name
F0D1	Retrieved file or directory was not found.
F630	Non-response to KEY_DET inquiry (It is not CPPM-DISC.)
F631	Even the FILE terminal cannot have done CPPM_KEY_DET.
F632	CPPM_KEY_DET cannot have been done.
9312	ADR is not one.
9F20	OUT of PB AREA
9F30	DATA Track PLAY
9F40	Media type decision (It is data among the drive managers.)

14.7. Service Mode Table 2

Following modes are available with combinations of the pressed buttons on the player and on the remote controller unit.

Item	Operational Condition and Key Function	Details	Display	To E
Error code display	While the player is stopped and no disc is inserted, press and hold down the [STOP] button on the player and the number button, “0” on the remote controller unit.	Error code display / Displays the latest error code stored in EEPROM.	[DVD_---] / / *---: Error number	Auto exits mod five s
ADSC internal RAM display	While the player is stopped and no disc is inserted, press and hold down the [STOP] button on the player and the number button “1” or “2” on the remote controller unit.	ADSC internal RAM display / Reads and displays the RAM value inside ADSC. The address is renewed when the CLEAR key is pressed so that the values at eleven points appear.	[xxx _DDDD_A] / / A : ADSC internal RAM display mode / xxx : Address / DDDD : RAM value at displayed address Values are shown in the hexadecimal digit. The above example indicates that ADSC value at the address, xxx is DDDD.	Pres STOI
Measurement of CD laser current electricity	While the player is stopped and no disc is inserted, press and hold down the [STOP] button on the player and the number button “3” on the remote controller unit.	Measurement of CD laser current electricity / Measures CD laser current electricity and displays the result together with the initialization value stored in EEPROM. After measurement, CD laser is lit till the power is turned off (or goes off when the primary power is turned off).	[xxx_yyy_DC] / / DC : CD laser current electricity measurement mode / xxx : Current electricity initialization value stored in EEPROM / yyy : Present value of current electricity Values are shown in the decimal digit. The above example indicates the current electricity initialization value is xxx mA and its present value is yyy mA when laser is turned on.	Auto exits mod five s

Item	Operational Condition and Key Function	Details	Display	To E
Display the device name	While the player is stopped and no disc is inserted, press and hold down the [STOP] button on the player and the number button “4” on the remote controller unit.	Display the device name	[xxxxxxxxxx]	Auto exits mod five s
Jitter display	While the player is stopped and no disc is inserted, press and hold down the [STOP] button on the player and the number button, “5” on the remote controller unit.	Jitter display / Measures and displays jitter. Measurement is repeated every second. Read error counter starts at 0 at the mode setting, and increased by one as data read fails at target block. A small defect is allowed to correct by retry. Any possibility is counted as one increment. Repetitive errors after retry increase by two levels or more.	[xxx_yyy_zz] / / xxx : Jitter measurement value / yyy : Read error counter / zz : Focus driving value Values are shown to one decimal place in the decimal digit.Focus driving value is displayed in the hexadecimal digit.	Pres STOI
Region display	While the player is stopped and no disc is inserted, press and hold down the [STOP] button on the player and the number button, “6” on the remote controller unit.	Region display	[u__w_xy_zzz] / / w : Region number / u x : N noPAL P PAL / y: N NTSC 6 PAL60 / zzz: Paneconjampa information	Auto exits mod five s

Item	Operational Condition and Key Function	Details	Display	To E
Firm version display	While the player is stopped and no disc is inserted, press and hold down the [STOP] button on the player and the number button, “7” on the remote controller unit.	Firm version display	[srrrxxyzzz] / / s : Model type of Panecon / rrr : Release number of Panecon / xxx : Generation of Shiscon (26) / y : Model type of Shiscon / zzz : Release number of Shiscon	Auto exits mod five s
Region and firm display	While the player is stopped and no disc is inserted, press and hold down the [STOP] button on the player and the number button, “8” on the remote controller unit.	Region and firm version display	[__r__xyzzz] / / r : Region number / x : Generation of Shiscon / y : Model type of Shiscon / zzz : Release number of Shiscon	Auto exits mod five s
User initialization	While the player is stopped and no disc is inserted, press and hold down the [STOP] button on the player and the number button ≥10 on the remote controller unit.	User initialization / The user setting recovers the factory setting.	[_INITIALIZE_]	Auto exits mod five s

Item	Operational Condition and Key Function	Details	Display	To E
DVD reset	While the user initialization, press and hold down the [STOP] button on the player and the number button “ENTER” on the remote controller unit.	DVD reset / The user setting is returned in the state of the factory shipment. It doesn't initialize it at the time of the laser and the time of the spindle to develop a model table initial value of the corresponding number referring to Paneconjampa.	[_DVD_RESET_ _]	Auto exits mod five s
Laser use time	While the player is stopped and no disc is inserted, press and hold down the [STOP] button on the player and the ▲ button on the remote controller unit.	Laser usage time / Measures each for DVD and CD respectively.	[_1234_5678] / / The numbers in the left show usage time for DVD laser and those in the right for CD laser. The four-digit number is shown by the ten hours in the decimal digit. The number after 0000 is 9999.	Auto exits mod five s
Reset laser use time	While the usage time 1 is displayed, press and hold down the [STOP] button on the player and the ▼ button on the remote controller unit.	Laser usage time reset / Resets both for DVD and CD at once.	[_0000_0000]	Auto exits mod five s
Spindle use time	While the player is stopped and no disc is inserted, press and hold down the [STOP] button on the player and the ▶ button on the remote controller unit.	Spindle motor usage time	[_00_30__ERR] / / The four -digit number is shown by the ten hours in the decimal digit. The number after 00_00 is 99_99.	Auto exits mod five s

Item	Operational Condition and Key Function	Details	Display	To E
Reset spindle use time	While the usage time 2 is displayed, press and hold down the [STOP] button on the player and the ◀ button on the remote controller unit.	Usage time 2 reset / Spindle motor usage time	[_00_00__ERR]	Auto exits mod five s
Communication error display	While the player is stopped and no disc is inserted, press and hold down the [STOP] button on the player and the “MENU” button on the remote controller unit.	Displays frequency of communication errors between system computer firm IC and mechanical computer IC during DVD module.	[_00_00__ERR]	Auto exits mod five s
Measurement of laser current electricity initialization value	While the player is stopped and no disc is inserted, press and hold down the [STOP] button on the player and the “PAUSE” button on the remote controller unit.	Measurement of laser current electricity initialization value / Memorizes each initialization value of DVD and CD in EEPROM.	[xxx_yyy_DO] / / DO : Laser current electricity measurement mode / xxx : DVD current electricity value / yyy : CD current electricity value Values are shown in the decimal digit. The above example indicates that the current electricity initialization value is xxx mA at DVD laser and yyy mA at CD laser when laser is turned on.	Auto exits mod five s

Item	Operational Condition and Key Function	Details	Display	To E
Measurement of DVD laser current electricity	While the player is stopped and no disc is inserted, press and hold down the [STOP] button on the player and the "DISPLAY" button on the remote controller unit.	Measurement of DVD laser current electricity / Measures DVD laser current electricity and displays the result together with the initialization value stored in EEPROM. After measurement, DVD laser is lit till the power is turned off (or goes off when the primary power is turned off).	[xxx_yyy_DD] / / DD: DVD laser current electricity measurement mode / xxx: Current electricity initialization value stored in EEPROM / yyy: Present value of current electricity Values are shown in the decimal digit. The above example indicates that the current electricity initialization value is xxx mA and its present value is yyy mA.	Auto exits mod five s

14.8. Tray Lock Function

14.8.1. Setting

- Disc Lock Function

1. With the SELECTOR on DVD/CD and POWER ON, hold down the [STOP] KEY on the main unit, and then press the [POWER] KEY on the remote control for 3 seconds to enter to Lock mode A.[_ _ _LOCKED_] will be displayed for 3 seconds, and then current disc will begin playing.
2. In Lock mode A, the following key is disabled. [OPEN/CLOSE]

- Operation Lock Function

1. With the SELECTOR on DVD/CD and POWER ON, hold down the [DVD/CD] KEY on the main unit, and then press the [POWER] KEY on the remote control for 3 seconds to enter Lock mode B. [_ _ _ LOCKED_] will be displayed for 3 seconds, and the current disc will begin playing.
2. Lock mode B primarily controls the selector and disc operations, and disenables for the following keys.

Note:

OPEN/CLOSE button are invalid and the player displays "___LOCKED_" while the lock function mode is entered.

14.9. Things to Do After Repair (Precaution)

Follow the procedure described below after repair.

1. **While the power is on, press the ⏏ button to close the tray.**
2. **Press the power button to turn off the power.**
3. **Unplug the power cable.**

Note:
It is prohibited to unplug the power cable while the tray is opened and to close the tray manually. This would cause the mechanism unit to be jammed.

14.10. Displaying Self-Diagnostic Results

(Cassette Deck Section) (H01, H02, H03, F01, F02)

1. **Enter the self-diagnostic mode, following the instructions described in [14.1.4. Entering Self-Diagnostic Mode].**
2. **Insert a normal-positioned music tape with erase prevention niches on both Sides A and B. Press [TAPE ▶] button to activate the TPS operation so that the tape automatically stops at an interval between music selections.**
3. **Press [STOP ■] and [TAPE ▶] buttons together on the remote controller. (Recording does not start.)**
4. **Then, insert a Cr02-positioned blank cassette tape with an erase prevention niche of Side A or B set to the left side.**
5. **Press[∧/FF/▶▶|] button on the remote control. The tape will be forwarded and automatically stop after two seconds.**
6. **Remove the cassette tape, and set the other side.**
7. **Press [∨/ REW/ |◀◀] button on the remote control. The tape will be rewound and automatically stops after two seconds.**
8. **Press [STOP ■] button on the unit.**
   If an error is found, a self-diagnostic key appears on the display. If several errors are found, the display shows these keys when

[STOP ■] button is pressed repeatedly. (Ex.:H01 -H02 - F01 - H01)

14.11. Error detection for DVD/CD block

Error Code	Abnormal Items	Possible Cause
F15	CD REST SW abnormal	CD traverse position intial setting operation failsfe counter ms)waiting for REST SW to turn on. Error No. shall be clear or during coldstart.
H15	The CD tray closes	CD disc tray detect switch NG. (Check and replace.)
F26	CD servo LSI command signal abnormal	CD function DTMS command, after system setting, if SENSE cannot be detected. Memory shall contain F26 code. After Power on, CD functio continue, error shall occur “NO DISC” Error No. shall be clear by force or coldstart.
F28	DISC LOAD abnormal	While going to play position, iffailsafe counter is finished ar to o change or switch target condition was not achieve, this shall be memorized. Next time mechanism operates, it shall coldstart. Error No. shall be clear by force or coldstart.
F29	DISC unload abnormal	While going to play position, if failsafe counter is finished a no change or switch target condition was not achieve, this shall be memorized. Next time mechanism operates, it shall coldstart. Error No. shall be clear by force or coldstart.
F27	Slide operation abnormal	During vertical operation, if faisafe timer is finished and swi change or switch target condition was not achieve, this erro be memorized. Next time mechanism operates, it shall do c ErrorNo. shall be clear by force or coldstart.
F17	Down SW abnormal	During vertical operation going to the bottom position, if fai timer is finished and switch no change or switch target con was not achieve, this error shall be memorized. The Next tir mechanism operates, it shall do mechanism initialization. E shall be clear by force or coldstart.
F22	Loading Mode/ Mecha abnormal	During mecha initialization, Loading mode mechanism abno normal operation cannot be achieve. The next time mechan operates, it shall do mechanism initialization. Error No. shal by force or coldstart.
Abnormal item	Error Display	Method of detection
F75	CD power abnormal	under normal operation (self-diagnostic mode inclusive), ch CDRST is H for SELECTOR at CD. If it is not H after 1 sec, it memorised as an error.

14.12. Error detection code for Cassette Mechanism Block

Error Code	Abnormal Items	Possible Cause
H01	MODE SW abnormal	Normal operation during mecha transition, MODE SW abno memorised. The content of abnormality can be confirmed ir abnormal detection mode explained in the later section.
H02	REC INH SW abnormal	The content of abnormality can be confirmed in the abnorm detection mode explained in the later section.
H03	HALF SW abnormal	
F01	Reel pulse abnormal	
F02	TPS abnormal	

14.13. Changer Reliability Test 1

1. Enter into test mode. (Refer to section 14.1.4)

2. Press [1] button on the remote control. it enters into ageing mode.

- During this series of operation, the number of its operation shall be shown in the alphanumeric display repeatedly.
It shall start from [_ _ 00001]

- It shall move up one counter when step 1~8 of the above operations end.
It shall display [_ _ 00000] after [_ _ 99999] has been reached.

- Press POWER key, tray return to PLAY position and then POWER is OFF.

During test mode, if mecha operation encounters abnormality or time over , retry operation shall be done but aging test mode shall stop.
Ageing process:

Operation	
Tray 1	CLOSE / OPEN / CLOSE / READ
Tray 1	OPEN / CLOSE / CHANGE
Tray 4	CLOSE / READ / CHANGE
Tray 5	CLOSE / READ / CHANGE
Tray 2	CLOSE / READ / CHANGE
Tray 3	CLOSE / READ / CHANGE / (Back to tray 1 and repeat)

Note: To exit ageing mode, press [POWER] button. The unit will power down. Do not unplug the power cord until FL display shows “GOOD-BYE”. This is to avoid tray jam problem.

14.14. Changer Reliability Test 2

1. Enter into test mode. (Refer to section 14.1.4)

2. Press [2] button on the remote control. it enters into ageing mode.

- During this series of operation, the number of its operation shall be

shown in the alphanumeric display repeatedly.
It shall start from [_ _ 00001]

- It shall move up one counter when step 1~8 of the above operations end.
  It shall display [_ _ 00000] after [_ _ 99999] has been reached.
- Press POWER key, tray return to PLAY position and then POWER is OFF.

During test mode, if mecha operation encounters abnormality or time over , retry operation shall be done but aging test mode shall stop.
Ageing process:

Operation	
Tray 1	CLOSE / READ / OPEN / CLOSE / CHANGE
Tray 2	CLOSE / READ / OPEN / CLOSE / CHANGE
Tray 3	CLOSE / READ / OPEN / CLOSE / CHANGE
Tray 4	CLOSE / READ / OPEN / CLOSE / CHANGE
Tray 5	CLOSE / READ / OPEN / CLOSE / CHANGE / (Back to tray 1 and repeat)

Note: To exit ageing mode, press [POWER] button. The unit will power down. Do not unplug the power cord until FL display shows “GOOD-BYE”. This is to avoid tray jam problem.

14.15. Changer Reliability Test 3

1. Enter into test mode. (Refer to section 14.1.4)
2. Press [3] button on the remote control. it enters into ageing mode.

- During this series of operation, the number of its operation shall be shown in the alphanumeric display repeatedly.
  It shall start from [_ _ 00001]
- It shall move up one counter when step 1~8 of the above operations end.
  It shall display [_ _ 00000] after [_ _ 99999] has been reached.
- Press POWER key, tray return to PLAY position and then POWER is OFF.

During test mode, if mecha operation encounters abnormality or time over , retry operation shall be done but aging test mode shall stop.
Ageing process:

Operation	
Tray 1	OPEN / CLOSE / READ / CHANGE
Tray 2	OPEN / CLOSE / READ / CHANGE
Tray 3	OPEN / CLOSE / READ / CHANGE
Tray 4	OPEN / CLOSE / READ / CHANGE
Tray 5	OPEN / CLOSE / READ / CHANGE / DISC CHECK / (Back to tray 1 and repeat)

Note: To exit ageing mode, press [POWER] button. The unit will power down. Do not unplug the power cord until FL display shows "GOOD-BYE". This is to avoid tray jam problem.

Display Example:	**[1OP000000]**	**...TRAY OPEN**
	[1CL000000]	**...TRAY CLOSE**
	[1CH000000]	**...TRAY CHANGING**

15. Cautions To Be Taken During Servicing

15.1. Recovery after the dvd player is repaired

- When Flash ROM or DVD Module P.C.B. is replaced, carry out the recovery processing to optimize the drive. Playback the recovery disc to process the recovery automatically.
- Recovery disc (Product number=RFKZD03R005)
- Performing recovery

1. Load the recovery disc (Product number: RFKZD03R005) to the player and run it.
2. Recovery is performed automatically. When it is finished, a message appears on the screen.
3. Remove the recovery disc.
4. Turn off the power.

Note:
This unit requires no initialization process carried out after the traditional DVD players were repaired. When the recovery measures are taken, the customer setting will return to the factory setting as same as the procedure described in item "Initialization" is carried out. Write down the contents of the setting before recovery processing, and reset the player.

15.2. DVD Player Firmware Version Upgrade Process

Firmware of DVD player may upgrade to conform to improvement of its performance and quality including operational range, playability of non-standardized discs, etc. The version upgrade disc contains the recovery function, and the recovery disc is not necessary.

Note:
Version upgrade process cannot be complete if the AC power is cut off due to power failure and

other occasions during the process. If this occurs, replace FLASH ROM and restart version upgrade. Version upgrade disc number is informed when ordered.

15.3. Firmware Version Upgrade Process by Using Disc and Recovery Process

- Recovery process

- Firmware version upgrade process

Both of the above procedures automatically start when the recovery disc is replayed.General CD -R disc allows version upgrade process and recovery process, making version upgrade through disc simple. / Recovery process: Optimization process of player after replacement of FLASH ROM, EEPROM, or module circuit board / Version upgrade process: Renewal of firmware for improvement of operational range and performance

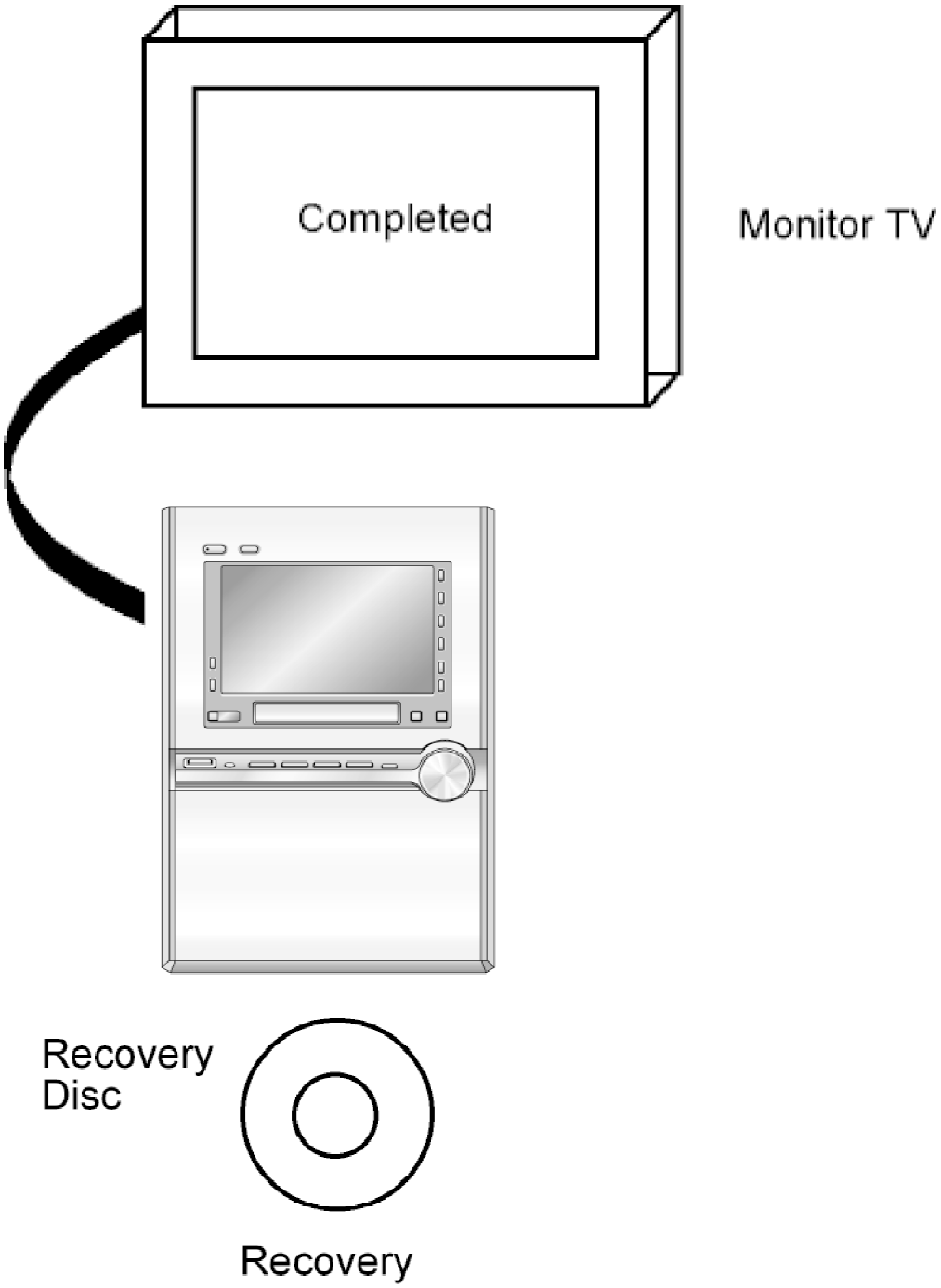

15.4. Using Recovery Disc

15.4.1. Recovery Process

1. **Insert the recovery disc (RFKZD03R005) to the player to replay.**
2. **The recovery process automatically starts, and a message of completion prompts on the screen.**
3. **Remove the disc.**

4. Turn off the power.

15.4.2. Version Upgrade Process

1. Insert the recovery disc to the player to replay.
2. The version of player is automatically checked and prompts if necessary.
3. Select version upgrade process using the cursor keys on the remote controller unit. (Select YES or NO)
4. a. If YES is selected, the process starts.
   b. If NO is selected, only the recovery process is applied.
5. a. When the version upgrade process is complete, a message of completion appears on the screen. Remove the disc.
   b. Follow the instruction appearing on the screen, and remove the disc.
6. Turn off the power.

15.5. Total Usage Time Display

1. Details of Operation/Display

1 2 3 4 5 6 7 8	Total usage time of DVD/CD lasers Time is shown by the ten hours in the decimal digit.
____T 2__1 2 3 4	Total usage time of spindle motor Time is shown by the ten hours in the decimal digit.

Keys for Operation: / Laser usage time: While the player is stopped and no disc is inserted, press both the ■ button on the player and the ▲ button on the remote controller unit. / Spindle motor usage time: While the player is stopped and no disc is inserted, press both the ■ button on the player and the ▶ button on the remote controller unit. / / To reset the usage time, while the usage time is displayed: / Laser usage time: press both the ■ button on the player and the ▼ button on the remote controller unit. / Spindle motor usage time: press both the ■ button on the player and the ◀ button on the remote controller unit.

2. Purpose of Use

To obtain reference data of laser and spindle motor systems during failure diagnosis. / To check faulty parts during re-repair.

16. Procedure for Checking Operation of Individual Parts for Deck Mechanism Unit

16.1. Operation Check with Cassette Tape

1. Pull up the EJECT lever using a rubber band. (Fig. 6)

2. Supply DC5V to MOTOR. (→MOTOR rotates.) (Fig. 5)

3. Insert a cassette tape to the unit.

4. Supply DC9V to the plunger, and turn the power ON and OFF. (→ Power +PL, -PL) (Fig. 5)

A. FWD PLAY: Supply the plunger power in a flash. (ON: approx. 5msec)

B. FWD FF: Supply the plunger power in a flash at PLAY mode. (ON: approx. 5msec)

C. STOP: Supply the plunger power in a flash at FWD FF mode. (ON: approx. 5msec)

D. REV PLAY: Supply the plunger power in a normal timing at STOP mode. (ON: approx. 200msec)

E. REV REW: Supply the plunger power in a flash at REV PLAY mode. (ON: approx. 50msec)

F. STOP: Supply the plunger power in a flash at FF mode. (ON: approx. 50msec)

Repeat the operation (→FWD PLAY)

(Note) Other operation may start if a timing of supplying the plunger power is missed.

16.1.1. Connection Status between Mechanism and Power Supply (Motor, Plunger)

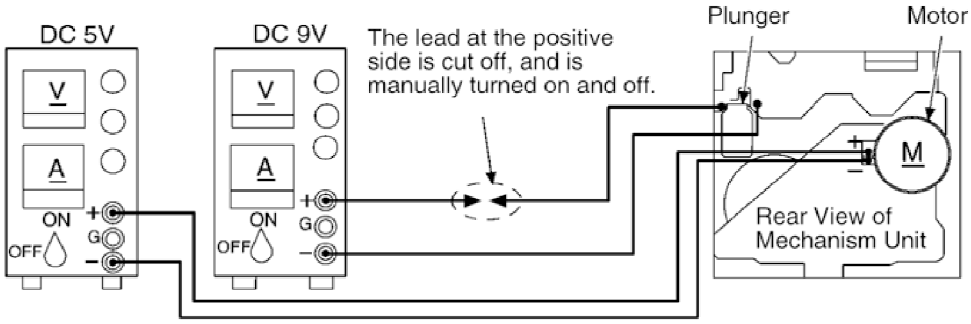

Fig. 5

16.1.2. Operative Parts of Mechanism Unit (EJECT lever fitted with rubber band, / Plunger/Rib operation)

Fig. 6

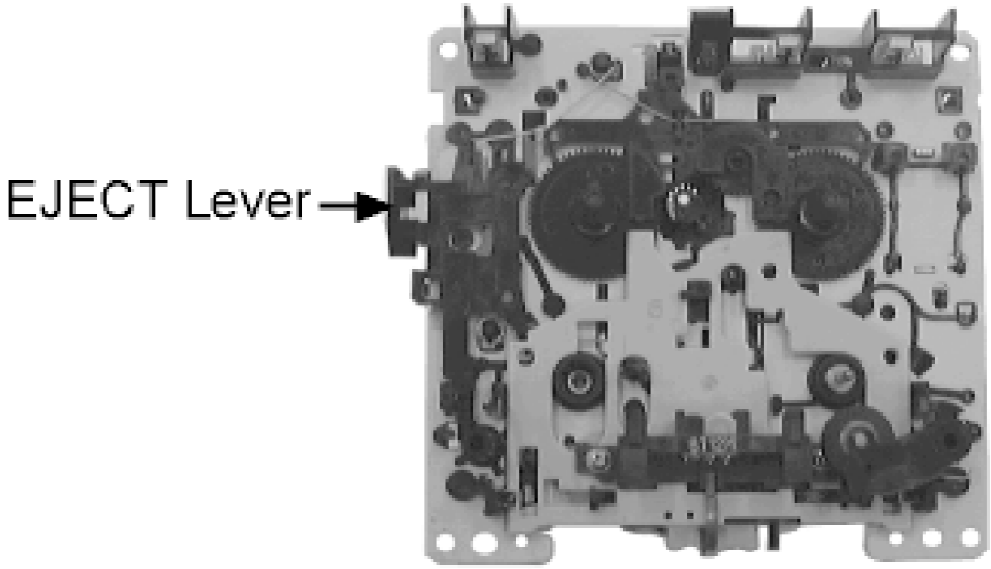

16.2. Operation Check without Cassette Tape

1. Pull up the EJECT lever using a rubber band. (Fig. 6)

2. Supply DC5V to MOTOR. (→MOTOR rotates.)

3. Lift up the mechanism unit's plunger/rib with the tip of a negative screwdriver, and operate the unit in the same timing as / supplying the power. (Fig. 7) /

Fig. 7

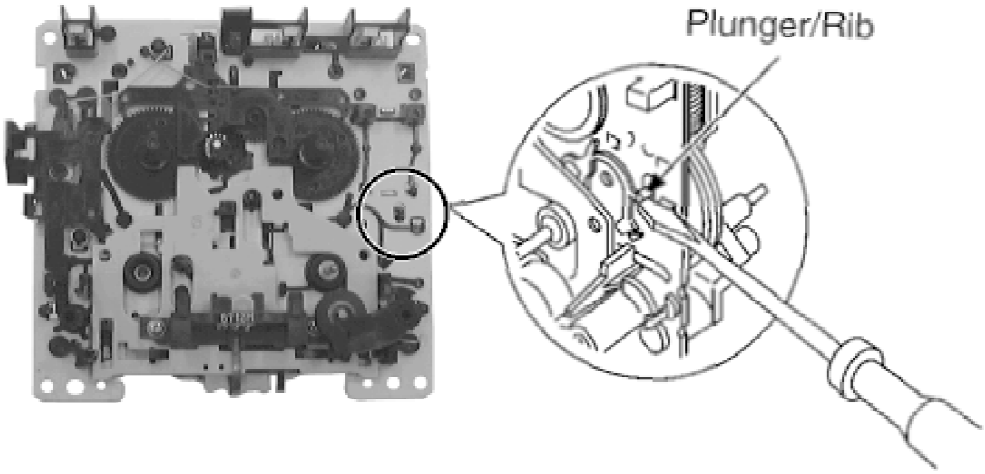

17. Measurement And Adjustments

17.1. Cassette Deck Section

17.1.1. Requirements

- Test tape (QZZCFM) (QZZCWAT)
- Normal blank cassette tape (QZZCRA)
- Digital frequency counter
- Oscilloscope
- Electrical voltmeter
- Headphone jack output jig (Fig. 8)

17.1.2. Setting of Unit

- VOLUME: MAX

17.1.3. Preparations

1. Apply under [12. Assembling and Disassembling].
2. Remove 4 screws from the mechanism unit to disassemble. under [12. Assembling and Disassembling].
3. Connect the headphone jack output jig (Fig. 8) to headphone jack.

Fig. 8

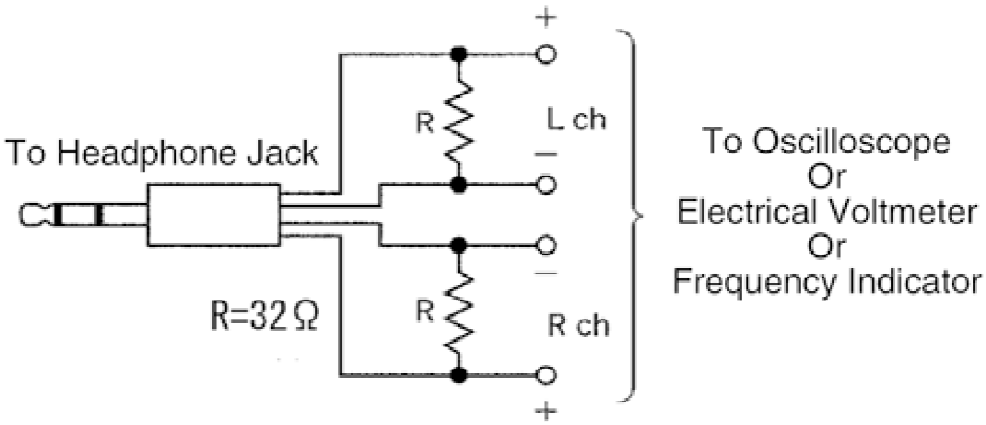

Fig. 9

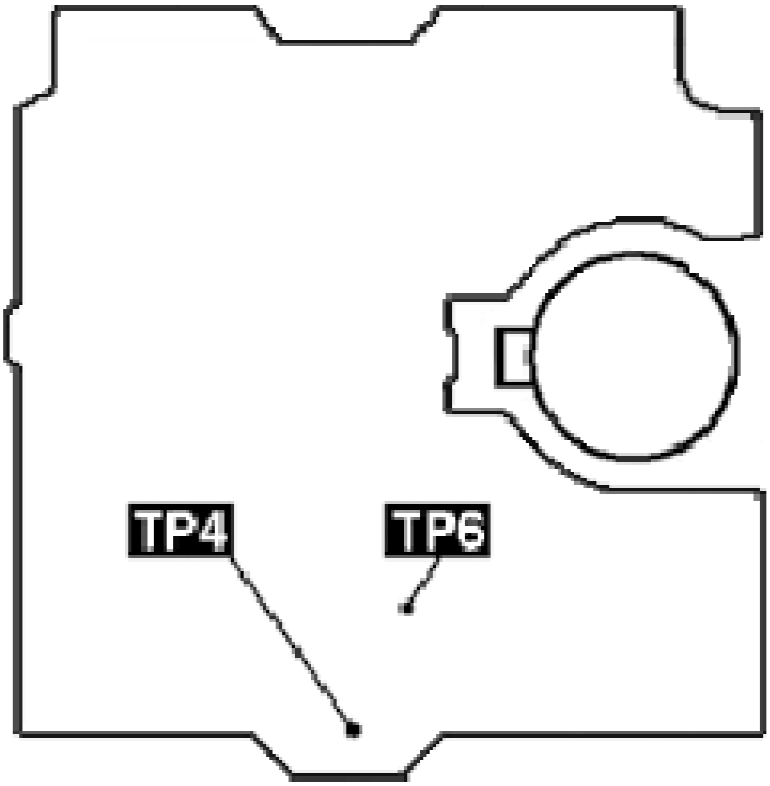

17.1.4. Tape Speed Adjustment

- Normal speed adjustment (only during forward playback)
(Product reference value: 3,000±90Hz)

1. Connect a frequency indicator. (Fig. 12)

2. Playback the middle portion of the test tape (QZZCWAT).

3. Adjust the motor screw so that the following output level is produced. (Fig. 10)

Adjustment Range: 3,000 ± 90Hz (a constant speed)

Fig. 10

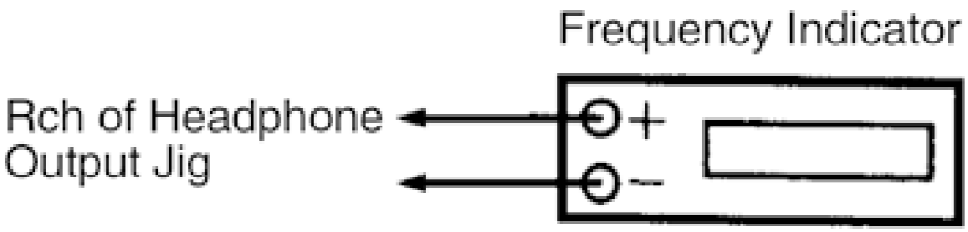

Fig. 11

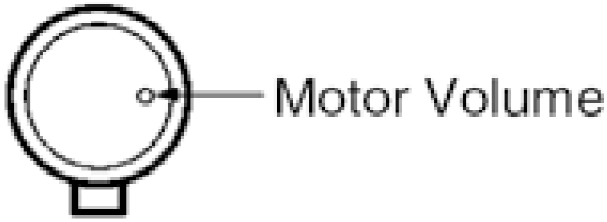

17.1.5. Bias Voltage Check

1. **Connect an electrical voltmeter. (Fig. 12)**
2. **Set the function to "TAPE" position.**
3. **Insert a normal blank cassette tape (QZZCRA).**
4. **While pressing and holding down [● REC] button, press [TAPE ▶] button to pause the recording mode. (Repeat pressing the buttons till the recording pause mode is activated.)**
5. **Check that the output level is within the standard range.**
   Standard Range: 14 ± 4mV

Fig. 12

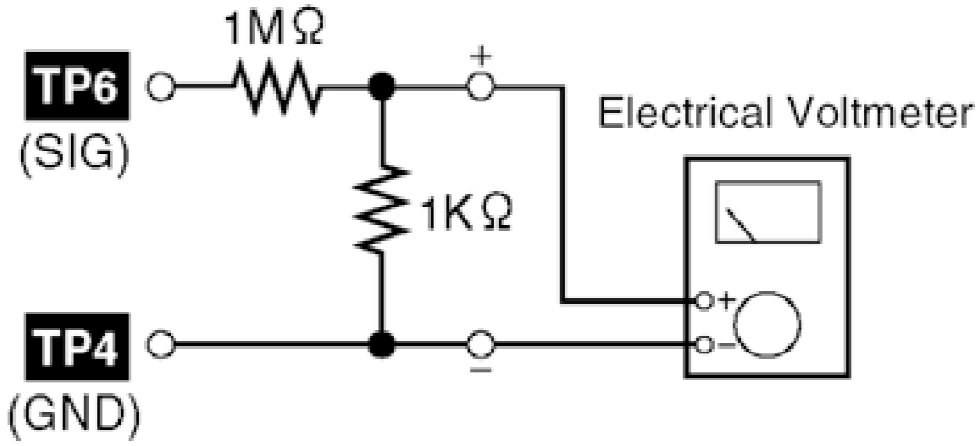

17.1.6. Bias Frequency Check

1. **Connect a digital frequency counter (Fig. 13).**
2. **Set the function to “TAPE” position.**
3. **Insert a normal blank cassette tape (QZZCRA) and press “REC” mode on main unit.**
4. **Check that the output frequency is within the standard range.**

Standard Value: 98 ±8 kHz

Fig. 13

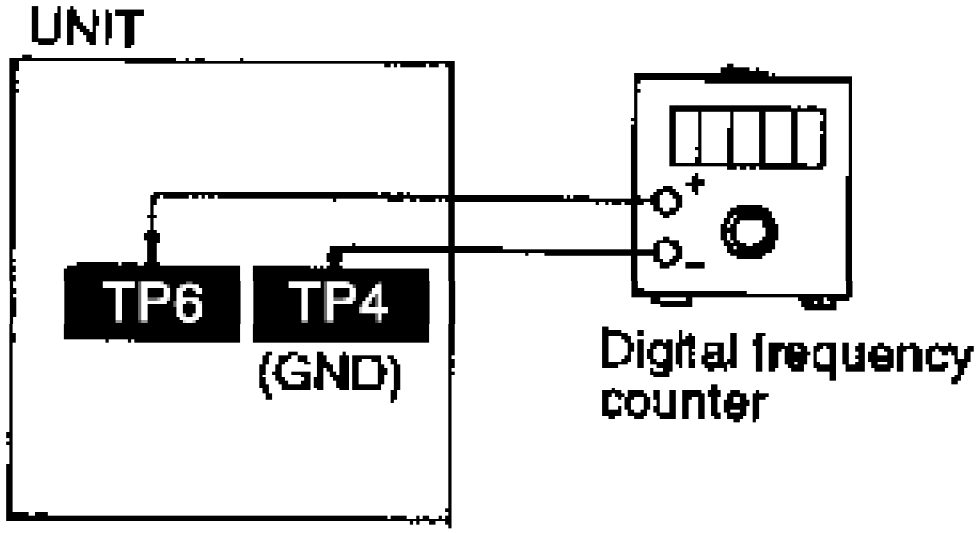

18. Voltage Measurement and Waveform Chart

Note:

- **Indicated voltage values are the standard values for the unit measured by the DC electronic circuit tester (high-impedance) with the chassis taken as standard.**
  Therefore, there may exist some errors in the voltage values, depending on the internal impedance of the DC circuit tester.
- **Circuit voltage and waveform described herein shall be regarded as reference information when probing defect point because it may differ from actual measuring value due to difference of Measuring instrument and its measuring condition and product itself.**
- **Measurement with shield ON.**

18.1. Voltage Measurement

18.1.1. DVD Module P.C.B.

18.1.2. CD Loading P.C.B.

18.1.3. Main P.C.B.

18.1.4. Harmonic Bass P.C.B.

18.1.5. Panel P.C.B.

18.1.6. Deck P.C.B.

18.1.7. Deck Mechanism P.C.B.

18.1.8. Power P.C.B.

18.1.9. Transformer P.C.B.

18.2. Waveform

19. Block Diagram

19.1. DVD Module Block

19.2. Main Block

20. Notes of Schematic Diagram

(All schematic diagrams may be modified at any time with the development of new technology)
Note :

S1

Stock switch

S2

Play switch

S3

Bottom switch

S4

Open switch

S5

Change switch

S601

Bass/Treble switch

S602

REW switch

S603

DVD/CD switch

S604

FWD switch

S605

Tape switch

S606

Stop switch

S607

Disc 5 switch

S608

Disc_Change switch

S609

Open/Close switch

S610

H. Bass switch

S611

Tuner/Aux switch

S612

Disc_Check switch

S613
ADV_Surround switch

S613
Down switch

S614
Up switch

S616
Power switch

S617
Rec switch

S618
Disc 1 switch

S619
Disc 2 switch

S620
Disc 3 switch

S621
Disc 4 switch

S971
Mode switch

S972
Half switch

S973
CR02 switch

S975
Recinh_f switch

S1901
Tape Eject switch

VR601
Volume

- The voltage value and waveforms are the reference voltage of this

unit measured by DC electronic voltmeter (high impedance) and oscilloscope on the basis of chassis. Accordingly, there may arise some error in voltage values and waveforms depending upon the internal impedance of the tester or the measuring unit.

- Importance safety notice :
  Components identified by ⚠ mark have special characteristics important for safety. Furthermore, special parts which have purposes of fire-retardant (resistors), high-quality sound (capacitors), low-noise (resistors), etc. are used. When replacing any of components, be sure to use only manufacturer's specified parts shown in the parts list.

Caution !

IC, LSI and VLSI are sensitive to static electricity.
Secondary trouble can be prevented by taking care during repair.

- Cover the parts boxes made of plastics with aluminium foil.
- Put a conductive mat on the work table.
- Ground the soldering iron.
- Do not touch the pins of IC, LSI or VLSI with fingers directly.

21. Schematic Diagram

21.1. Optical Pickup Unit Circuit

21.2. DVD Module Circuit

21.3. Main Circuit

21.4. Panel Circuit, Component Video Circuit, Harmonic Bass Circuit & Switch Circuit

21.5. Transformer Circuit & Speaker Circuit

21.6. Power Circuit

21.7. Deck Circuit, Tape Eject Circuit & Deck Mechanism Circuit

21.8. CD Loading Circuit

22. Printed Circuit Board

22.1. DVD Module P.C.B. (Side: A & B)

22.2. Main P.C.B.

22.3. Panel P.C.B.

22.4. Transformer P.C.B.

22.5. Power P.C.B.

22.6. Deck P.C.B. & Tape Eject P.C.B.

22.7. Deck Mechanism P.C.B. & CD Loading P.C.B.

22.8. Component Video P.C.B. & Harmonic Bass P.C.B.

22.9. Switch P.C.B. & Speaker P.C.B.

23. Wiring Connection Diagram

24. Type Illustrations of ICs, Transistors & Diodes

25. Terminal Function of IC's

25.1. IC2801(C2CBJG000573) Microprocessor

Pin No.	Mark	I/O	Function
1	ST_SW	I	Stock Switch Change
2	OP/CL_REV	O	Reverse control signal for OPEN/ CLOSE motor
3	OP/CL_FWD	O	Forward control signal for OPEN/ CLOSE Motor
4	OPEN_SW	I	Signal from Rotary tray OPEN Switch
5	POSITION	I	Signal from of Position Detection sensor
6	N.C.	-	No Connection
7	N.C.	-	No Connection
8	BYTE	I	External Data Bus Width Select input
9	CNVSS	-	VSS (GND) [Pull to Gnd via Resistor]
10	XCIN	-	SUB CLOCK INPUT (32.768 kHz)
11	XCOUT	-	SUB CLOCK OUTPUT (32.768 kHz)
12	RESET	I	SYSTEM RESET INPUT
13	XOUT	-	MAIN CLOCK OUTPUT (10 MHZ)

Pin No.	Mark	I/O	Function
14	Vss	-	GNS (0V)
15	XIN	-	MAIN CLOCK INPUT (10 MHZ)
16	VCC	-	POWER SUPPLY (5V)
17	NMI	I	CONNECT TO VCC, EXTERNAL INTERRUPT I/P
18	RMT	I	REMOCON INPUT
19	SYNC	I	AC FAILURE DETECT INPUT
20	Up/ Down R	O	Changer Motor 2 Reverse Control
21	Change SW	I	Changer Change Switch
22	BOTTOM SW	I	CHANGER BOTTOM SWITCH
23	EDA	I/O	DATA signal for the EEPROM
24	ECLK	O	CLOCK signal for the EEPROM
25	ECS	O	LAT signal for the EEPROM
26	UP/ DOWN F	O	Changer Motor 2 Forward Control
27	TU-TUNED	I	SIGNAL DET Input from Tuner
28	TU_ST/ DO	I	Stereo Indicator from Tuner/ DO-OUTPUT of Tuner IC
29	TU_SCL	O	Clock Signal for Tuner
30	TU_SDA	I/O	Data Signal for Tuner
31	N.C.	-	No Connection
32	N.C.	-	No Connection
33	N.C.	-	No Connection
34	N.C.	-	No Connection
35	DVD_CMD	O	CMD signal for the DVD Module
36	DVD_STA	I	STATUS signal from the DVD module
37	DVD_CK	I	CLK signal for the DVD Module
38	HB_LVL	O	Harmonic Bass LEVEL Control

Pin No.	Mark	I/O	Function
39	Progressive	O	Video Output Control for Progressive
40	HB_MUTE	O	Harmonic Bass MUTE
41	EPM	I	For Flash
42	SUB MUTE	O	Subwoofer Mute Signal
43	MUTE_A	O	Mute Audio signal
44	DVD_MUTE	I	Signal fromDVD module control mute circuit
45	RGBH	O	RGB video output control signal
46	VMIX_CTL	O	Control signal for the video signal Mix
47	Wide1	O	S-video output control
48	ASP_DA	O	DATA signal for 6ch VOL ASP
49	ASP_CK	O	CLOCK signal for 6ch VOL ASP
50	N.C.	-	No Connection
51	N.C.	-	No Connection
52	KA_LAT	O	Karaoke Latch
53	KA_DAT	O	Karaoke Data
54	KA_CLK	O	Karaoke Clock
55	Demo	I	DEMO detect Key (H= Default On, L= Default Off)
56	N.C.	-	No Connection
57	N.C.	-	No Connection
58	N.C.	-	No Connection
59	N.C.	-	No Connection
60	N.C.	-	No Connection
61	N.C.	-	No Connection
62	VCC	-	POWER SUPPLY 5.0V
63	N.C.	-	No Connection
64	VSS	-	GND (0V)
65	HB_LED	O	Harmonic Bass LED Control
66	N.C.	-	No Connection
67	N.C.	-	No Connection
68	DVD_PCONT	O	Control Signal for the Power for the DVD MODULE
69	N.C.	-	No Connection

Pin No.	Mark	I/O	Function
70	PCONT	O	Control Signal for the Power Control Relay
71	MUTE_H	O	HIC MUTE
72	DC DET	I	Signal from the DC Detection circuit
73	N.C.	-	No Connection
74	N.C.	-	No Connection
75	JOG_B	I	Signal B from Volume JOG
76	JOG_A	I	Signal A from Volume JOG
77	MIC_SW	I	MIC Switch detection
78	REC	O	Deck Recording Control (Recording= H)
79	PHOTO	I	Deck Photo Detection
80	DMT	O	Deck Mute at Mecha Transition (L= Mute Off, H= Mute On)
81	BP	O	AM Beat proof 1 (L= BP1, H= BP2)
82	MOTOR	O	Deck Motor Control (L= OFF, H=ON)
83	PLUNGER	O	Deck Plunger Control (L=OFF, H=ON)
84	FLD_CK	O	Clock Signal for the FL Driver
85	FLD_DA	O	Data input for the FL Driver
86	LED	O	LED Control For dimmer
87	FLD_RST	O	Reset Signal for the FL Driver
88	FLD_CS	O	Latch Signal for the FL Driver
89	DECK_AD1	I	Deck AD Input 1
90	DECK_AD2	I	Deck AD Input 2
91	Key 3	I	Key 3 line input
92	Key 2	I	Key 2 line input
93	DES3	I	REGION Setting for DVD
94	DES2	I	REGION Setting for SYSTEM
95	DES1	I	REGION Setting for TUNER

Pin No.	Mark	I/O	Function
96	AVSS	-	ANALOG POWER SUPPLY INPUT
97	KEY 1	I	Key 1 line input
98	VREF	-	REFERENCE VOLTAGE INPUT
99	AVCC	-	ANALOG POWER SUPPLY INPUT
100	PLAY_SW	I	Play Switch

26. Parts Location and Replacement Parts List

Notes:

- **Important safety notice:**
  Components identified by ⚠ mark have special characteristics important for safety.
  Furthermore, special parts which have purposes of fire-retardant (resistors), high-quality sound (capacitors), low-noise (resistors), etc. are used.
  When replacing any of these components, be sure to use only manufacturers's specified parts shown in the parts list.
- **The parenthesized indications in the Remarks column specify the areas or color. (Refer to the cover page for area or color.)**
  Parts without these indications can be used for all areas.
- **Warning: This product uses a laser diode. Refer to caution statements on "Precaution of Laser Diode".**
- **Capacitor values are in microfarad (μ F) unless specified otherwise, P=Pico-farads(pF); Farads.**
- **Resistance values are in ohms, unless specified otherwise, 1K= 1,000(ohms).**
- **The marking (RTL) indicates that the Retention Time is limited for this item. After the discontinuation of this assembly in production, the item will continue to be available for a specific period of time. The retention period of availability is dependant on the type of assembly, and in accordance with the lows govening part and product retention. After the end of this period, the assembly will no longer be available.**
- **[M] Indicates in the Remarks columns indicates parts that are supplied by PAVCSG.**

- [SPG] Indicates in the Remarks columns indicates parts that are supplied by PAVC.
- Reference for O/I book languages are as follows :

Ar : Arabic	Cf : Canadian French	Cz : Czech	Da : Danish
Du : Dutch	En : English	Fr : French	Ge : German
It : Italian	Ko : Korean	Po : Polish	Ru : Russian
Sp : Spanish	Sw : Swedish	Co : Traditional Chinese	Cn : Simplified Chi
Pe: Persian	Ur: Ukraine		

26.1. Deck Mechanism (RAA4402-S)

26.1.1. Deck Mechanism Parts Location

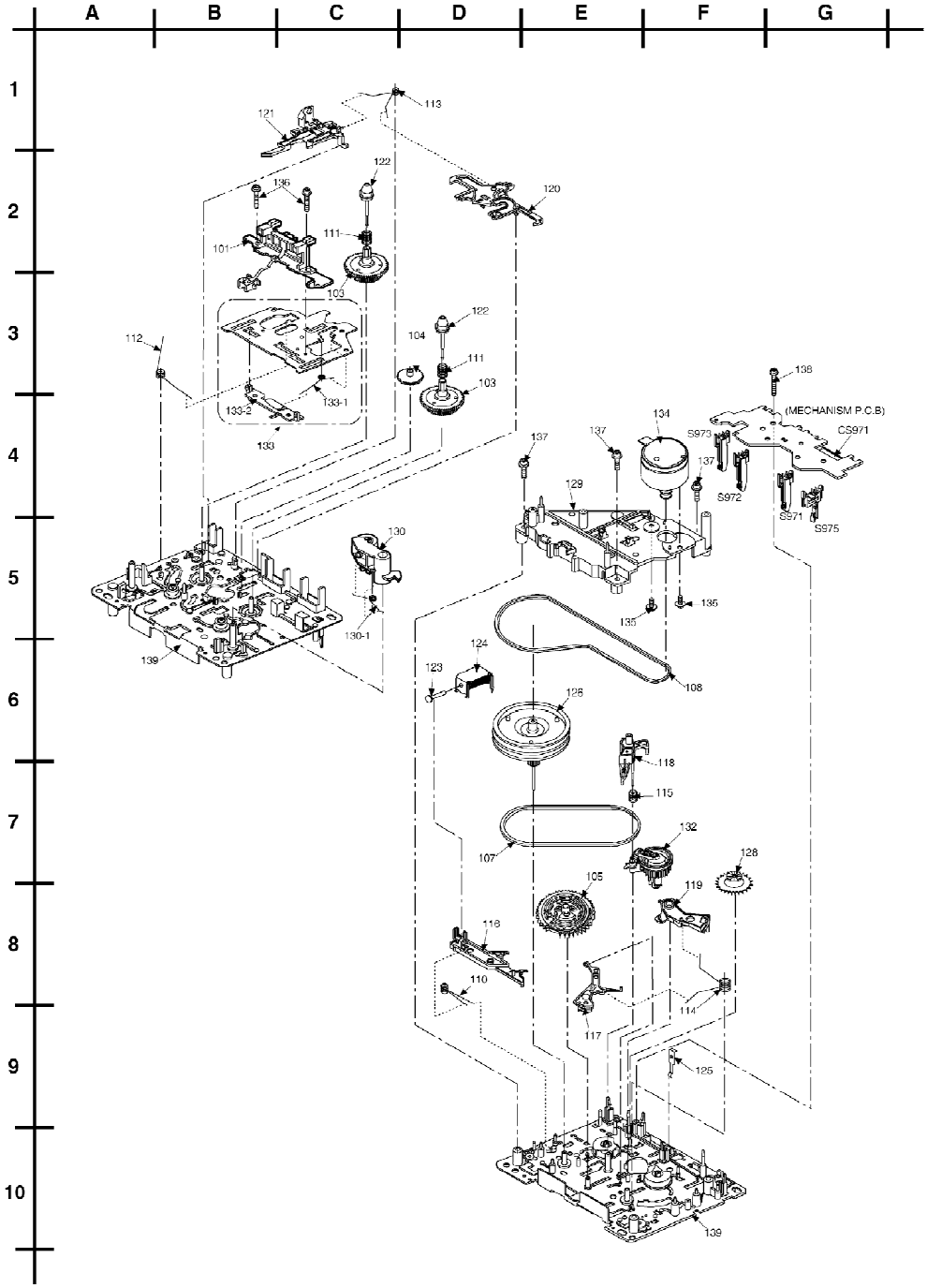

26.1.2. Deck Mechanism Parts List

Ref. No.	Part No.	Part Name & Description	Remarks
		CASSETTE DECK	
101	RED0067	R/P HEAD BLOCK UNIT	[M]
103	RDG0300	REEL BASE GEAR	[M]
104	RDG0301	WINDING RELAY GEAR	[M]
105	RDK0026	MAIN GEAR	[M]
107	RDV0033-4	WINDING BELT	[M]
108	RDV0064	CAPSTAN BELT	[M]
110	RMB0312	TRIGGER LEVER SPRING	[M]
111	RMB0400	REEL SPRING	[M]
112	RMB0403	HEAD PANEL SPRING	[M]
113	RMB0404	BRAKE ROD SPRING	[M]
114	RMB0406	FR LEVER SPRING	[M]
115	RMB0408	THRUST SPRING	[M]
116	RML0370	TRIGGER LEVER	[M]
117	RML0371	FR LEVER	[M]
118	RML0372	WINDING LEVER	[M]
119	RML0374	EJECT LEVER	[M]
120	RMM0131	BRAKE ROD	[M]
121	RMM0133	EJECT ROD	[M]
122	RMQ0519	REEL HUB	[M]
123	RMS0398-1	MOVING CORE	[M]
124	RXQ0470	PLUNGER	[M]
125	RMC0061	PACK SPRING	[M]
126	RXF0061	FLYWHEEL F ASS'Y	[M]
128	RXG0040	FF RELAY GEAR ASS'Y	[M]
129	RMK0283A-J	SUB-CHASSIS	[M]
130	RXL0124	PINCH ROLLER F ASSY	[M]
130-1	RMB0401	PINCH ARM SPRING F	[M]
132	RXL0126	WINDING ARM ASS'Y	[M]
133	RXQ0412	HEAD PANEL ASS'Y	[M]
133-1	RMB0405	FR ROD SPRING	[M]
133-2	RMM0132	FR ROD	[M]
134	REM0120	CAP MOTOR ASS'Y	[M]
135	RHD26022	MOTOR SCREW	[M]
136	XTW2+5L	HEAD BLOCK UNIT SCREW	[M]
137	XTW26+10S	SUB-CHASSIS SCREW	[M]
138	XYC2+JF17	PCB EARTH SCREW	[M]
139	RFKJSTR280PP	CHASSIS ASS'Y	[M]

26.2. CD Loading Mechanism

26.2.1. CD Loading Mechanism Parts Location

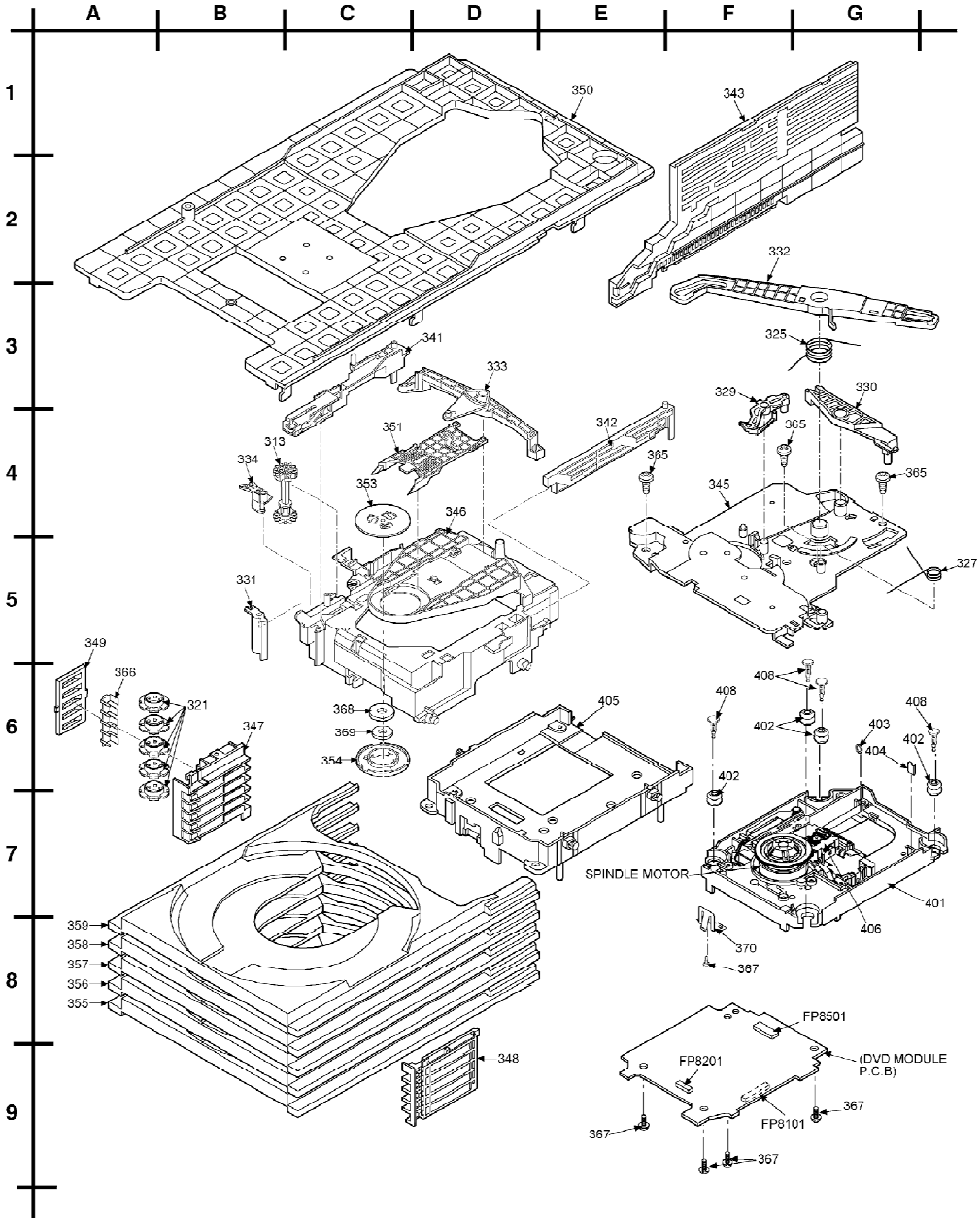
A
B
C
D
E
F
G
1
2
3
4
5
6
7
8
9
350
343
332
325
341
333
329
330
351
342
365
313
334
353
346
345
327
331
349
366
321
347
368
369
354
405
408
402
403
404
401
406
SPINDLE MOTOR
370
367
359
358
357
356
355
348
FP8501
FP8201
(DVD MODULE P.C.B)
FP8101

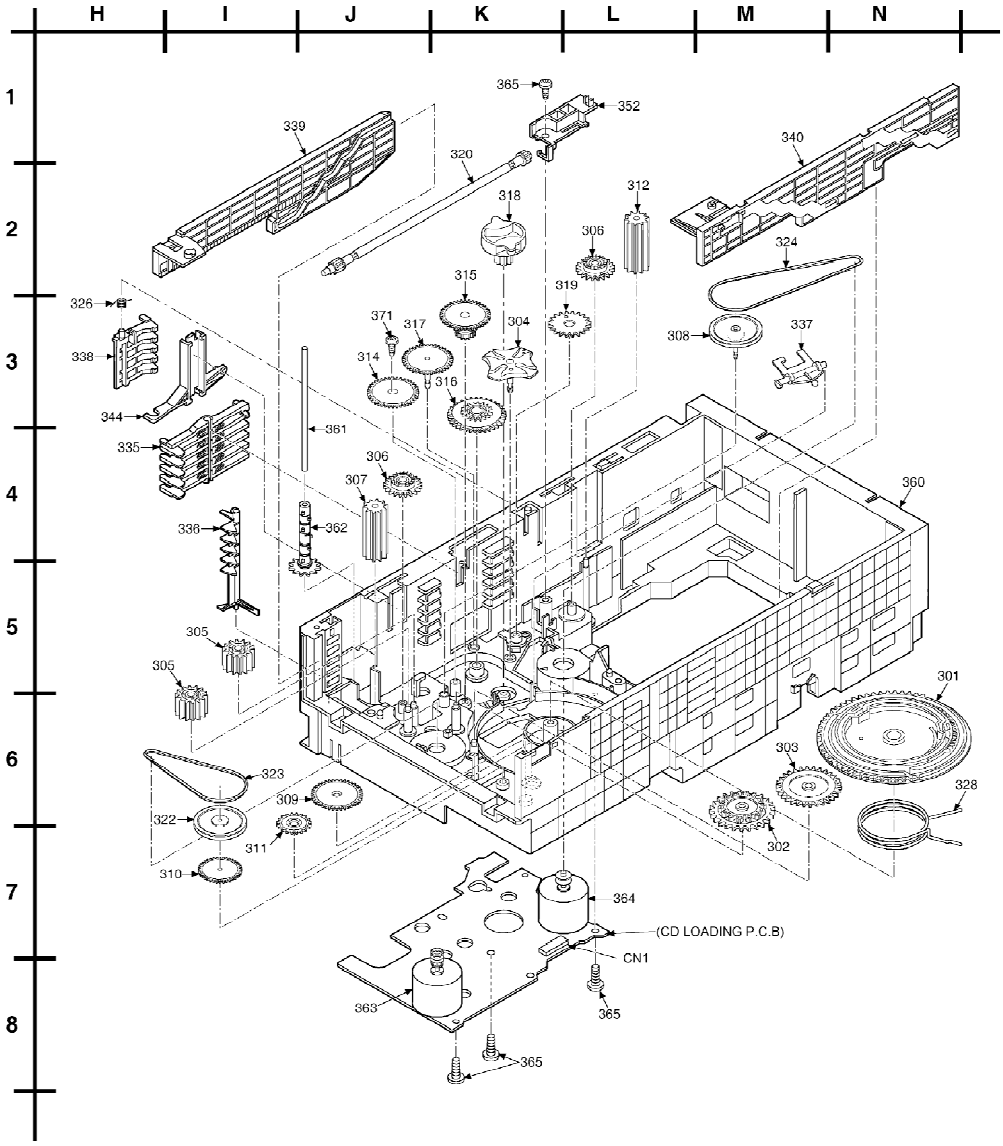

26.2.2. CD Loading Mechanism Parts List

Ref. No.	Part No.	Part Name & Description	Remarks
		TRAVERSE DECK	
301	RDG0519	MAIN GEAR	[M]
302	RDG0520	SPEED UP GEAR	[M]
303	RDG0521	REVERSE GEAR	[M]
304	RDG0522	GENEVA GEAR	[M]
305	RDG0523	HOR RELAY GEAR	[M]
306	RDG0525	CROWN GEAR	[M]
307	RDG0526	TRAY RELAY GEAR	[M]
308	RDG0527	UD PULLEY GEAR	[M]
309	RDG0528	HOR SPEED DOWN GEAR	[M]
310	RDG0529	HOR SPEED DOWN GEAR	[M]
311	RDG0530	HOR DRIVE GEAR	[M]
312	RDG0531	LOAD RELAY GEAR	[M]
313	RDG0532	LOAD GEAR	[M]
314	RDG0535	UD SPEED DOWN GEAR	[M]
315	RDG0534	UD SPEED DOWN GEAR	[M]
316	RDG0536	SELECT SPEED DOWN GEAR	[M]
317	RDG0537-1	SELECT DRIVE GEAR	[M]
318	RDG0538-1	CHANGE GEAR	[M]
319	RDG0539	UD DRIVE GEAR	[M]
320	RDG0540	TIMING GEAR	[M]
321	RDG0542	TRAY GEAR	[M]
322	RDG0543	HOR PULLEY GEAR	[M]
323	RDV0068	HOR BELT	[M]
324	RDV0069	UD BELT	[M]
325	RME0344-1	UD ASSIST SPRING	[M]
326	RME0361	TRAY STOPPER SPRING	[M]
327	RME0363-1	LIMIT SPRING	[M]
328	RME0368-1	MAIN GEAR SPRING	[M]
329	RML0616	SPEED UP LOCK	[M]
330	RML0617-2	SEPARATE LEVER 1	[M]
331	RML0618-1	SEPARATE LEVER 2	[M]
332	RML0619-1	UD. CONNECTION LEVER	[M]
333	RML0620	TRV.CONNECT LEVER	[M]
334	RML0621-2	TRAY CHG. LEVER	[M]
335	RML0622-1	TRAY LOCK LEVER	[M]
336	RML0623	OPEN SW. LEVER	[M]
337	RML0624	CHG. LEVER	[M]
338	RML0637	TRAY STOPPER	[M]
339	RMM0239-1	UD.RACK (L)	[M]
340	RMM0240	UD.RACK (R)	[M]
341	RMM0241-1	TRV.SLIDE PLATE (L)	[M]
342	RMM0242-1	TRV.SLIDE PLATE (R)	[M]
343	RMM0243	SELECT RACK	[M]
344	RMM0244	SELECT GUIDE	[M]
345	RMQ1051-2	PITCH PLATE	[M]
346	RMQ1209	UD BASE	[M]
347	RMQ1056	TRAY GUIDE (L)	[M]
348	RMQ1057	TRAY GUIDE (R)	[M]
349	RMQ1058	GEAR HOLDER	[M]
350	RMQ1059-2	TOP COVER	[M]
351	RMQ1060	CLAMP GUIDE	[M]
352	RMQ1061	TG.PLATE	[M]

Ref. No.	Part No.	Part Name & Description	Remarks
353	RMR1531-X	FIXTURE	[M]
354	RMR1446-X	CLAMPER	[M]
355	RMR1407A-H8	TRAY NO. 1	[M]
356	RMR1407B-H8	TRAY NO. 2	[M]
357	RMR1407C-H8	TRAY NO. 3	[M]
358	RMR1407D-H8	TRAY NO. 4	[M]
359	RMR1407E-H8	TRAY NO. 5	[M]
360	RFKNAPM77MDS	MECHA BASE ASS'Y	[M]
361	RMS0762	TRAY GEAR SHAFT	[M]
362	RXG0053	TRAY DRIVE GEAR ASSY	[M]
363	RXQ0803	LOADING MOTOR ASS'Y	[M]
364	RXQ0804	UD MOTOR ASS'Y	[M]
365	XTB3+10JFJ	SCREW	[M]
366	RMC0472	TRAY SPRING	[M]
367	XTV2+6GFJ	SCREW	[M]
368	XWG6FFY	BACK YOKE	[M]
369	JSM0048	MAGNET	[M]
370	RMC0387	SUPPORT SPRING	[M]
371	RHD26045-L	SCREW	[M]
401	RAE2012Z-S	DU69U TRAVERSE	[M]
402	RMG0598-A	FLOATING RUBBER	[M]
403	RMG0617-H	CUSHION RUBBER A	[M]
404	RMG0618-H	CUSHION RUBBER B	[M]
405	RMR1596-X2	MIDDLE CHASSIS	[M]
406	RXQ1252	DVD OPU SUB ASS'Y	[M]
408	RMS0789	FIXED PIN	[M]

26.3. Cabinet

26.3.1. Cabinet Parts Location

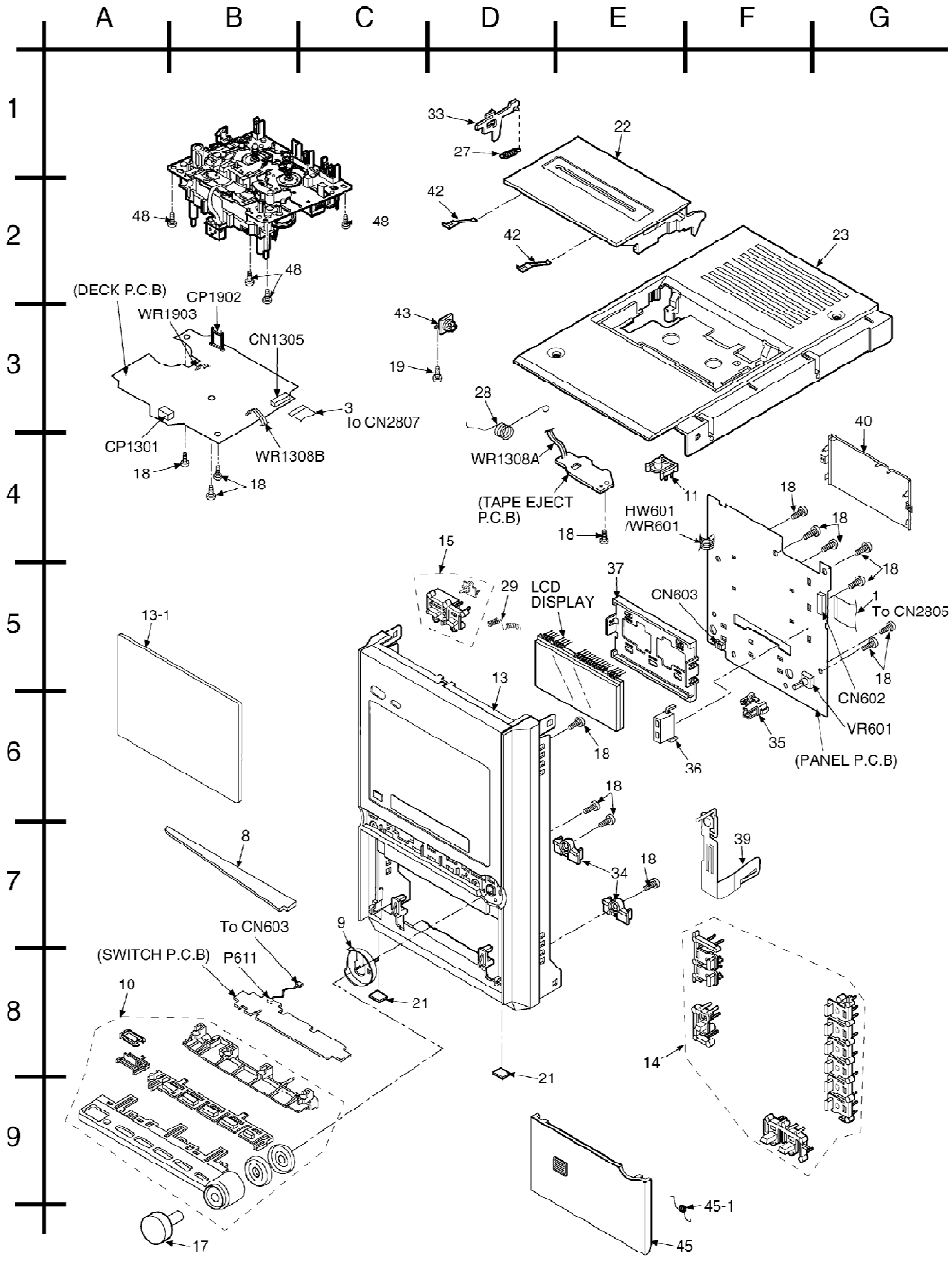
A
B
C
D
E
F
G
1
2
3
4
5
6
7
8
9
33
22
27
42
42
23
48
48
48
(DECK P.C.B)
CP1902
WR1903
CN1305
43
19
3
To CN2807
CP1301
WR1308B
18
18
28
WR1308A
(TAPE EJECT
P.C.B)
18
11
HW601
/WR601
40
18
18
18
1
To CN2805
18
CN602
VR601
(PANEL P.C.B)
35
36
15
29
LCD
DISPLAY
37
CN603
13-1
13
18
18
8
39
18
34
To CN603
9
(SWITCH P.C.B)
P611
10
21
21
14
45-1
45
17

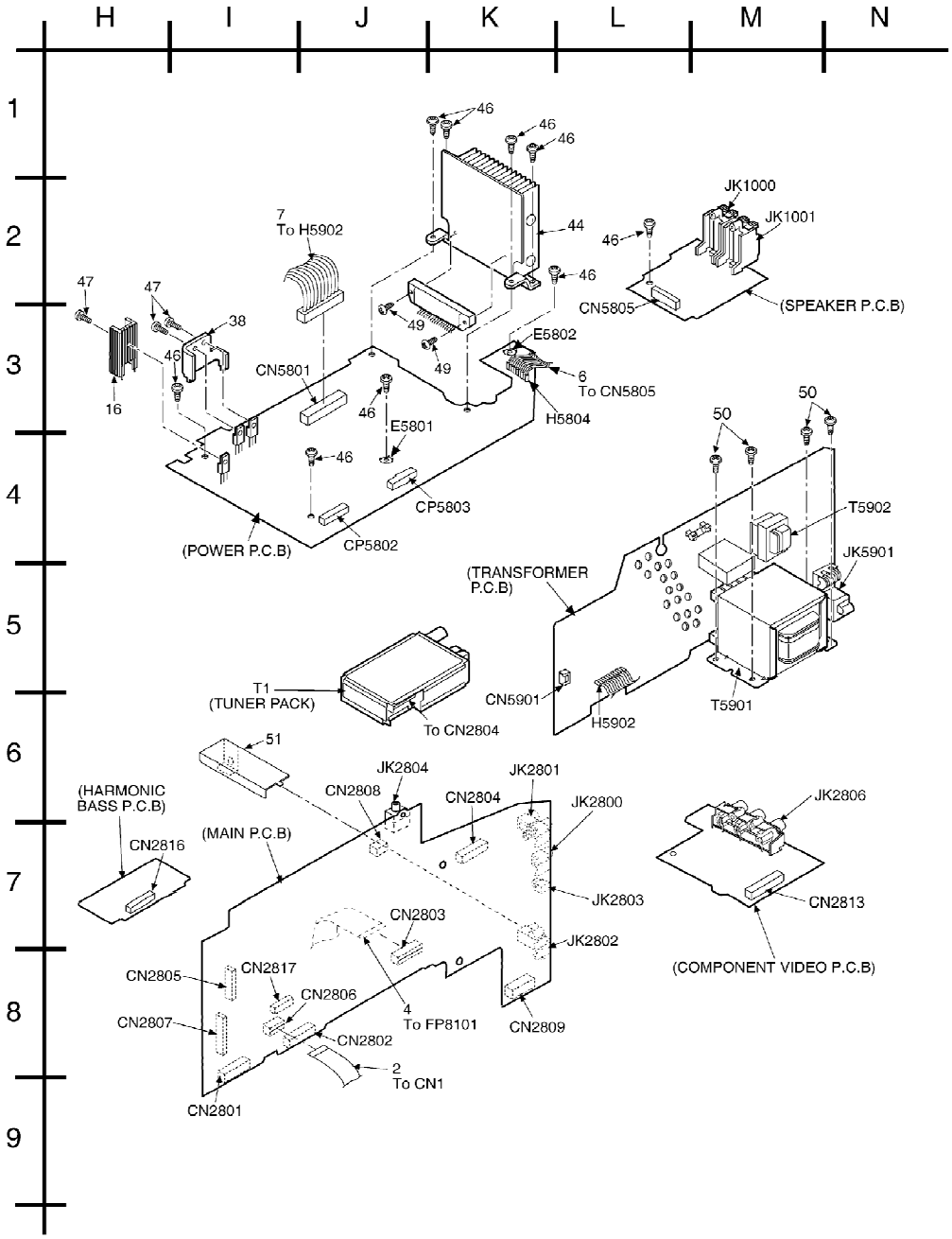
H
I
J
K
L
M
N
1
2
3
4
5
6
7
8
9
46
46
46
44
46
7
To H5902
JK1000
JK1001
46
CN5805
(SPEAKER P.C.B)
47
47
38
46
16
CN5801
49
49
E5802
6
To CN5805
H5804
46
E5801
46
CP5803
CP5802
(POWER P.C.B)
50
50
T5902
JK5901
(TRANSFORMER
P.C.B)
T1
(TUNER PACK)
To CN2804
CN5901
H5902
T5901
51
JK2804
JK2801
(HARMONIC
BASS P.C.B)
CN2808
CN2804
JK2800
JK2806
CN2816
(MAIN P.C.B)
JK2803
CN2813
CN2803
JK2802
CN2805
CN2817
CN2806
(COMPONENT VIDEO P.C.B)
4
To FP8101
CN2807
CN2802
CN2809
2
To CN1
CN2801

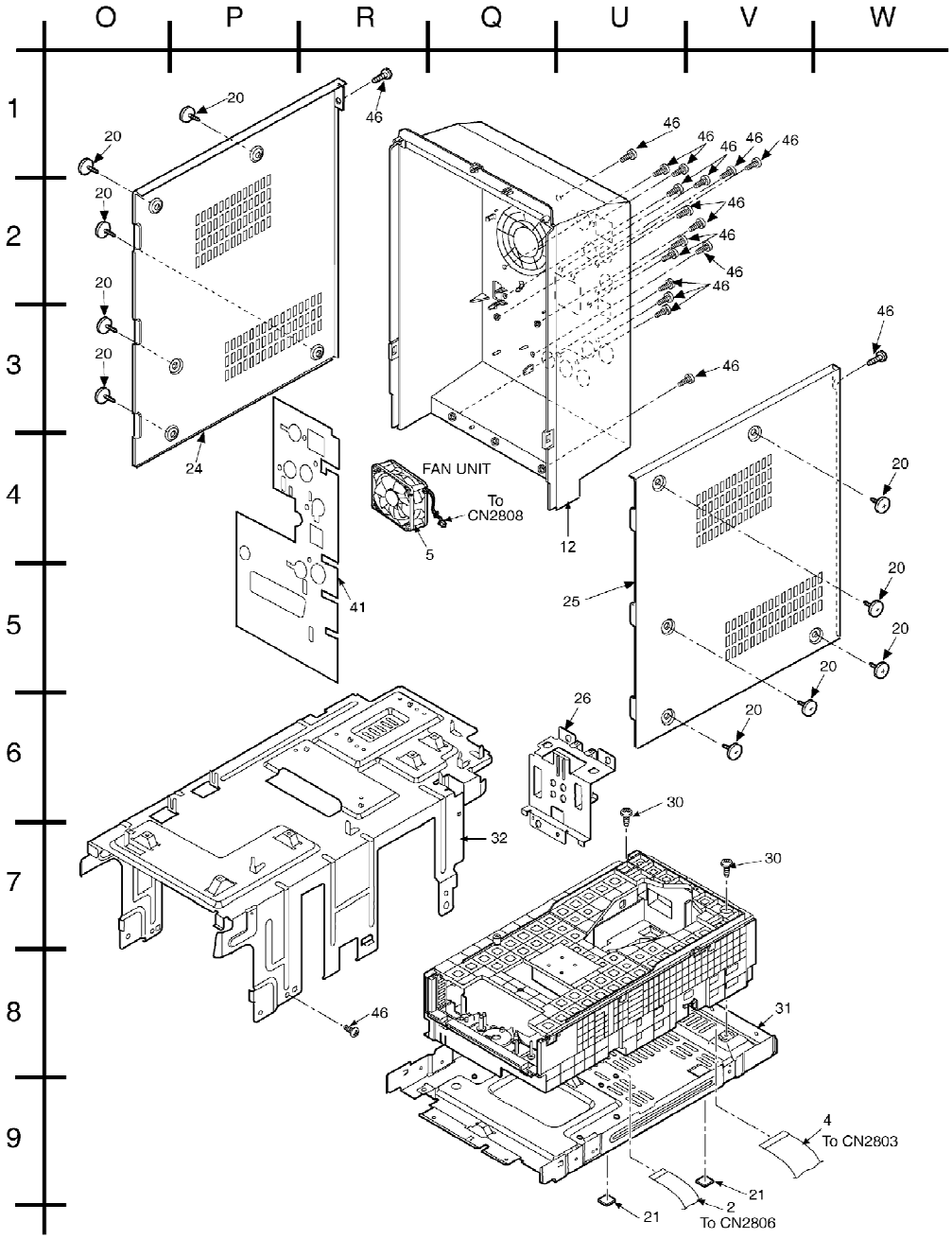

26.3.2. Cabinet Parts List

Ref. No.	Part No.	Part Name & Description	Remarks
		CABINET AND CHASSIS	
1	REEV0078	17P FFC	[M]
2	REEV0086	FFC WIRE	[M]
3	REEX0325	21P FFC (DECK)	[M]
4	REEX0327	FFC WIRE	[M]
5	REM0094A	COOLING FAN	[M]
6	REXX0399	8P WIRE	[M]
7	REXX0400	12P WIRE	[M]
8	RGL0675-Q	LIGHTING BAR	[M]
9	RGL0676-Q	VOLUME RING LIGHT	[M]
10	RYQ0545C-S	CENTER STAGE UNIT	[M]
11	RGU2280-S	CASS EJECT BUTTON	[M]
12	RFKHAPM91DGN	REAR CABINET ASS'Y	[M]
13	RFKGAPM91DGC	FRONT PANEL ASS'Y	[M]
13-1	RKW0784A-S	FL WINDOW	[M]
14	RGU2380A-S	5 DISC & ETC BUTTON	[M]
15	RGUV0129-S	POWER BUTTON UNIT	[M]
16	TUC25628	SMALL HEATSINK	[M]
17	RGW0415-S	VOLUME KNOB	[M]
18	RHD26046-L	SCREW	[M]
19	RHD26049	SCREW	[M]
20	RHD30007-1SJ	SCREW	[M]
21	RHGV0008	LEG CUSHION	[M]
22	RKF0688-S	CASS HOLDER LID	[M]
23	RKM0529-S	TOP CABINET	[M]
24	RKM0530A-S	SIDE PANEL (L)	[M]
25	RKM0531A-S	SIDE PANEL (R)	[M]
26	RMAV0029	VOLTAGE SELECTOR BRACKET	[M]
27	RMB0448-J	LOCK ROD SPRING	[M]
28	RMB0780-1	CASS OPEN SPRING	[M]
29	RMB0826	EARTH SPRING	[M]
30	RHD30115	SCREW	[M]
31	RMK0595-1	BOTTOM CHASSIS	[M]
32	RMKV0037	INNER CHASSIS	[M]
33	RMM0163-1	CASSETTE LOCK ROD	[M]
34	RMN0780	CD LID SUPPORT	[M]
35	RMN0818	LED HOLDER LIGHTING	[M]
36	RMN0819	LED HOLDER INDICATOR	[M]
37	RMNV0061	FL HOLDER	[M]
38	RMY0260	HEAT SINK	[M]
39	RSC0761	EARTH PLATE (DVD LID)	[M]
40	RSCV0062	FL REAR SHIELD	[M]
41	RSCV0063	REAR SHIELD PLATE	[M]
42	RUS757ZAA	CASS HALF SPRING	[M]
43	RXGX0003	DAMPER GEAR UNIT	[M]
44	RXXV0037	HEAT SINK UNIT	[M]
45	RYF0755A-S	DVD LID UNIT	[M]
45-1	RMB0827	DVD SPRING	[M]
46	XTB3+10JFJ	SCREW	[M]
47	XTB3+8JFJ	SCREW	[M]
48	XTV3+10GFJ-M	SCREW	[M]
49	XTW3+15TFJ	SCREW	[M]
50	XTWS3+6TFJ	SCREW	[M]

Ref. No.	Part No.	Part Name & Description	Remarks
51	RSC0669	SPEAKER SHIELD PLATE	[M]

26.4. Electrical Parts List

Ref. No.	Part No.	Part Name & Description	Remarks
		PRINTED CIRCUIT BOARD	
	REPV0057C	DVD MODULE P.C.B. (SIDE A & B)	[M](RTL)
	REPV0054F	MAIN P.C.B. / COMPONENT VIDEO P.C.B.	[M](RTL)
	REPV0053A	PANEL P.C.B. / HARMONIC BASS P.C.B.	[M](RTL)
	REPV0052F	TRANSFORMER P.C.B. / POWER P.C.B. / SPEAKER P.C.B.	[M](RTL)
	REPX0411E	DECK P.C.B. / TAPE EJECT P.C.B.	[M](RTL)
	REPX0321H	DECK MECHANISM P.C.B.	[M](RTL)
	REP3569A	CD LOADING P.C.B.	[M](RTL)
	REPV0064A	SWITCH P.C.B.	[M](RTL)
		INTEGRATED CIRCUITS	
IC11	C0GAG0000007	IC UP/DOWN MOTOR DRIVE	[M]
IC21	C0GAG0000007	IC LOADING MOTOR DRIVE	[M]
IC500	RSN315H41-P	IC POWER AMP HIC	[M]
IC601	C0HBB0000039	IC FL DISPLAY	[M]
IC971	CNB13030R2AU	IC PHOTO INTERUPTOR	[M]
IC1000	C1AA00000612	IC ANALOG SWITCH	[M]
IC1001	AN7326K	IC DECK R/P	[M]
IC2801	C2CBJG000573	IC MICRO PROCESSOR	[M]
IC2803	C0DBAJG00002	IC REGULATOR	[M]
IC2804	C0DBAJG00002	IC REGULATOR	[M]
IC2805	C0DBEFG00003	IC VOLTAGE REGULATOR	[M]
IC2806	C0DBZHG00016	IC 5V REGULATOR	[M]
IC2807	C0DBZHE00019	IC REGULATOR	[M]
IC2808	C9ZB00000431	IC VIDEO	[M]
IC2812	C1BB00000822	IC ASP	[M]
IC2813	C0AABB000085	IC OP AMP	[M]
IC2814	KIA4558FEL	IC OP AMP	[M]
IC2816	C0ABBB000067	IC OP AMP	[M]
IC2817	C0ABBB000067	IC OP AMP	[M]
IC2818	C0ABBB000067	IC OP AMP	[M]
IC8001	MN2DS0003APH	IC DV2.1	[M]
IC8051	C3ABPG000133	IC 64 SDRAM	[M]
IC8111	C0CBCBD00018	IC 3.3 REGULATOR	[M]
IC8251	C0GBG0000048	IC DRIVER	[M]
IC8420	C0FBBK000049	IC 2 CHANNEL DAC	[M]
IC8601	C0EBE0000384	IC RESET	[M]
IC8606	C0EBA0000031	IC RESET	[M]
IC8651	RFKWMH82H160	IC 16M FLASH ROM	[SPG]
IC8691	C0JBAA000346	IC AND GATE LOGIC	[M]
IC8695	C0JBAA000346	IC AND GATE LOGIC	[M]
		TRANSISTORS	
Q1	B3NAA0000098	TRANSISTOR	[M]
Q601	B1ABCE000016	TRANSISTOR	[M]

Ref. No.	Part No.	Part Name & Description	Remarks
Q602	B1ABCE000016	TRANSISTOR	[M]
Q603	B1ABCE000016	TRANSISTOR	[M]
Q611	B1GBCFJN0033	TRANSISTOR	[M]
Q680	KRC119STA	TRANSISTOR	[M]
Q1101	B1ABGC000005	TRANSISTOR	[M]
Q1201	B1ABGC000005	TRANSISTOR	[M]
Q1302	B1GDCFJJ0002	TRANSISTOR	[M]
Q1303	B1GBCFGH0001	TRANSISTOR	[M]
Q1304	B1GDCFGH0002	TRANSISTOR	[M]
Q1309	B1AAGC000006	TRANSISTOR	[M]
Q1310	B1AAGC000006	TRANSISTOR	[M]
Q1312	B1ABCF000011	TRANSISTOR	[M]
Q1314	B1GDCFGH0002	TRANSISTOR	[M]
Q1315	KTA12710YTA	TRANSISTOR	[M]
Q1316	2SD09650RA	TRANSISTOR	[M]
Q1317	B1ABGC000005	TRANSISTOR	[M]
Q2101	B1ABCE000016	TRANSISTOR	[M]
Q2102	B1ABGC000005	TRANSISTOR	[M]
Q2103	B1ABGC000005	TRANSISTOR	[M]
Q2201	B1ABCE000016	TRANSISTOR	[M]
Q2202	B1ABGC000005	TRANSISTOR	[M]
Q2203	B1ABGC000005	TRANSISTOR	[M]
Q2204	B1ABGC000005	TRANSISTOR	[M]
Q2205	B1ABGC000005	TRANSISTOR	[M]
Q2803	B1GBCFLL0037	TRANSISTOR	[M]
Q2805	UNR221200L	TRANSISTOR	[M]
Q2806	2SB0621AHA	TRANSISTOR	[M]
Q2807	B1ABCE000016	TRANSISTOR	[M]
Q2808	B1ABCE000016	TRANSISTOR	[M]
Q2809	B1ABCE000016	TRANSISTOR	[M]
Q2810	B1CABA000002	TRANSISTOR	[M]
Q2811	B1CABA000002	TRANSISTOR	[M]
Q2812	B1GCCFJJ0016	TRANSISTOR	[M]
Q2813	B1GBCFJJ0051	TRANSISTOR	[M]
Q2814	KTA1504GRTA	TRANSISTOR	[M]
Q2815	KTA1504GRTA	TRANSISTOR	[M]
Q2816	B1ABGC000005	TRANSISTOR	[M]
Q2817	B1GBCFGG0023	TRANSISTOR	[M]
Q2818	B1GBCFGG0023	TRANSISTOR	[M]
Q2826	B1GBCFJJ0051	TRANSISTOR	[M]
Q2827	KTC32030YTA	TRANSISTOR	[M]
Q3000	B1ABCE000016	TRANSISTOR	[M]
Q3001	B1ABCE000016	TRANSISTOR	[M]
Q3002	B1GDCFGG0026	TRANSISTOR	[M]
Q3003	B1GDCFGG0026	TRANSISTOR	[M]
Q5101	KTC3199GRTA	TRANSISTOR	[M]
Q5102	KTC3199GRTA	TRANSISTOR	[M]
Q5201	KTC3199GRTA	TRANSISTOR	[M]
Q5202	KTC3199GRTA	TRANSISTOR	[M]
Q5801	KTC2026	TRANSISTOR	[M]
Q5802	B1BCCG000023	TRANSISTOR	[M]
Q5803	KTC3199GRTA	TRANSISTOR	[M]
Q5804	B1BCCG000023	TRANSISTOR	[M]
Q5805	KRA110MTA	TRANSISTOR	[M]

Ref. No.	Part No.	Part Name & Description	Remarks
Q5807	B1ACCF000039	TRANSISTOR	[M]
Q5808	KTC3199GRTA	TRANSISTOR	[M]
Q5809	KTC3199GRTA	TRANSISTOR	[M]
Q5810	B1AAGC000007	TRANSISTOR	[M]
Q5901	2SB0621AHA	TRANSISTOR	[M]
Q5902	B1AAGC000007	TRANSISTOR	[M]
Q5903	KRC102MTA	TRANSISTOR	[M]
Q5904	2SD21370PA	TRANSISTOR	[M]
Q8550	B1ADHG000003	TRANSISTOR	[M]
Q8551	B1ABDF000018	TRANSISTOR	[M]
Q8552	2SB09700RL	TRANSISTOR	[M]
Q8560	B1ABDF000018	TRANSISTOR	[M]
Q8561	B1ABDF000018	TRANSISTOR	[M]
Q8562	2SB09700RL	TRANSISTOR	[M]
Q8606	B1ABDF000018	TRANSISTOR	[M]
Q8607	B1ABDF000018	TRANSISTOR	[M]
QR8111	UNR521400L	TRANSISTOR	[M]
QR8112	UNR521400L	TRANSISTOR	[M]
QR8420	B1GBCFJJ0047	TRANSISTOR	[M]
QR8571	B1GDCFEC0001	TRANSISTOR	[M]
		DIODES	
D601	B0BC6R100010	DIODE	[M]
D611	B3AEA0000058	DIODE	[M]
D612	B3AEA0000058	DIODE	[M]
D616	B3AAA0000487	DIODE	[M]
D619	B0BC8R100004	DIODE	[M]
D620	B0BC6R100010	DIODE	[M]
D680	B3ACA0000261	DIODE	[M]
D971	MA2C16500E	DIODE	[M]
D1301	B0ACCK000005	DIODE	[M]
D2101	MA2J72800L	DIODE	[M]
D2201	MA2J72800L	DIODE	[M]
D2801	B0ACCE000003	DIODE	[M]
D2802	B0ACCE000003	DIODE	[M]
D2803	B0ACCK000005	DIODE	[M]
D2804	B0JCPC000004	DIODE	[M]
D2805	B0BC7R500001	DIODE	[M]
D2806	B0JCPC000004	DIODE	[M]
D2807	B0BC7R500001	DIODE	[M]
D2809	B0ACCK000005	DIODE	[M]
D2810	B0ACCK000005	DIODE	[M]
D2811	B0ACCK000005	DIODE	[M]
D2812	B0ACCE000003	DIODE	[M]
D2814	B0ACCK000005	DIODE	[M]
D2815	B0BC5R600003	DIODE	[M]
D3000	B0JACE000003	DIODE	[M]
D3001	B0JACE000003	DIODE	[M]
D3002	B0JACE000003	DIODE	[M]
D5801	B0FBAM000009	DIODE	[M]
D5802	B0EAKM000117	DIODE	[M]
D5803	B0AACK000004	DIODE	[M]

Ref. No.	Part No.	Part Name & Description	Remarks
D5804	B0AACK000004	DIODE	[M]
D5805	B0AACK000004	DIODE	[M]
D5806	B0AACK000004	DIODE	[M]
D5808	B0BA9R600002	DIODE	[M]
D5812	B0BA9R600002	DIODE	[M]
D5813	B0AACK000004	DIODE	[M]
D5814	B0AACK000004	DIODE	[M]
D5815	B0EAKM000117	DIODE	[M]
D5816	B0EAKM000117	DIODE	[M]
D5817	B0EAKM000117	DIODE	[M]
D5818	MTZJ15BTA	DIODE	[M]
D5819	B0AACK000004	DIODE	[M]
D5901	B0EAKM000117	DIODE	[M]
D5902	B0EAKM000117	DIODE	[M]
D5903	B0BA03100002	DIODE	[M]
D5904	B0EAKM000117	DIODE	[M]
D5905	B0EAKM000117	DIODE	[M]
D5906	B0EAKM000117	DIODE	[M]
D5907	B0EAKM000117	DIODE	[M]
D5908	B0AACK000004	DIODE	[M]
D5909	B0EAKM000117	DIODE	[M]
D5910	B0EAKM000117	DIODE	[M]
D5911	B0EAKM000117	DIODE	[M]
D5912	B0EAKM000117	DIODE	[M]
D5913	B0BA6R600008	DIODE	[M]
D5917	B0EAKM000117	DIODE	[M]
D8231	MA2J11100L	DIODE	[M]
D8550	MA2J11100L	DIODE	[M]
D8571	MA2J72800L	DIODE	[M]
		CHIP INDUCTORS	
LB8001	J0JHC0000045	CHIP INDUCTOR	[M]
LB8002	J0JHC0000045	CHIP INDUCTOR	[M]
LB8301	J0JCC0000119	FERRITE BEAD	[M]
LB8302	J0JCC0000119	FERRITE BEAD	[M]
LB8303	J0JCC0000119	FERRITE BEAD	[M]
LB8304	J0JCC0000119	FERRITE BEAD	[M]
LB8305	J0JCC0000119	FERRITE BEAD	[M]
LB8401	ERJ2GEJ151X	CHIP RESISTOR	[M]
LB8421	ERJ2GE0R00X	CHIP JUMPER	[M]
LB8422	ERJ2GE0R00X	CHIP JUMPER	[M]
LB8423	ERJ2GE0R00X	CHIP JUMPER	[M]
LB8424	ERJ2GE0R00X	CHIP JUMPER	[M]
LB8491	ERJ2GE0R00X	CHIP JUMPER	[M]
LB8502	J0JHC0000045	CHIP INDUCTOR	[M]
LB8503	ERJ2GE0R00X	CHIP JUMPER	[M]
LB8504	J0JCC0000119	FERRITE BEAD	[M]
LB8505	J0JCC0000119	FERRITE BEAD	[M]
LB8507	J0JCC0000119	FERRITE BEAD	[M]
LB8511	ERJ3GEY0R00V	CHIP JUMPER	[M]
LB8512	ERJ3GEY0R00V	CHIP JUMPER	[M]
LB8513	ERJ3GEY0R00V	CHIP JUMPER	[M]
LB8514	ERJ3GEY0R00V	CHIP JUMPER	[M]

Ref. No.	Part No.	Part Name & Description	Remarks
LB8690	J0JCC0000091	FILTER	[M]
LB8691	ERJ2GEJ101X	CHIP RESISTOR	[M]
LB8692	ERJ2GEJ101X	CHIP RESISTOR	[M]
LB8693	ERJ2GEJ101X	CHIP RESISTOR	[M]
		VARIABLE RESISTOR	
VR601	EVEKE2F3024B	VOLUME JOG	[M]
		SWITCHES	
S1	K0L1BA000065	SW STOCK	[M]
S2	K0L1BA000065	SW PLAY	[M]
S3	K0L1BA000078	SW BOTTOM	[M]
S4	RSH1A045-1A	SW OPEN	[M]
S5	K0L1BA000065	SW CHANGE	[M]
S601	K0F111A00472	SW BASS/TREBLE	[M]
S602	K0F111A00472	SW REW	[M]
S603	K0F111A00472	SW DVD/CD	[M]
S604	K0F111A00472	SW FWD	[M]
S605	K0F111A00472	SW TAPE	[M]
S606	K0F111A00472	SW STOP	[M]
S607	EVQ21405RJ	SW DISC 5	[M]
S608	EVQ21405RJ	SW DISC_CHANGE	[M]
S609	EVQ21405RJ	SW OPEN/CLOSE	[M]
S610	EVQ21405RJ	SW H.BASS	[M]
S611	EVQ21405RJ	SW TUNER/AUX	[M]
S612	EVQ21405RJ	SW DISC_CHECK	[M]
S613	EVQ21405RJ	SW ADV_SURROUND	[M]
S613	K0F111A00472	SW DOWN	[M]
S614	K0F111A00472	SW UP	[M]
S616	EVQ21405RJ	SW POWER	[M]
S617	EVQ21405RJ	SW REC	[M]
S618	EVQ21405RJ	SW DISC 1	[M]
S619	EVQ21405RJ	SW DISC 2	[M]
S620	EVQ21405RJ	SW DISC 3	[M]
S621	EVQ21405RJ	SW DISC 4	[M]
S971	RSH1A018-3U	SW MODE	[M]
S972	RSH1A019-2U	SW HALF	[M]
S973	RSH1A019-2U	SW CR02	[M]
S975	RSH1A019-2U	SW RECINH_F	[M]
S1901	EVQ21405RJ	SW TAPE EJECT	[M]
		CONNECTORS	
CN1	K1MN14B00066	14P FFC CONNECTOR	[M]
CN602	K1MN17B00032	17P CONNECTOR	[M]
CN603	K1KA03BA0061	3P CONNECTOR	[M]
CN1305	K1MN21B00010	21P FFC CONNECTOR	[M]
CN2801	K1KB12B00036	12P CONNECTOR	[M]
CN2802	K1KB12B00036	12P CONNECTOR	[M]
CN2803	K1MN50A00008	50P CONNECTOR	[M]
CN2804	K1KA10AA0031	10P CONNECTOR	[M]
CN2805	K1MN17A00040	17P FFC CONNECTOR	[M]

Ref. No.	Part No.	Part Name & Description	Remarks
CN2806	K1MN14C00004	14P FFC CONNECTOR	[M]
CN2807	K1MN21A00031	21P CONNECTOR	[M]
CN2808	K1KA02AA0186	2P CONNECTOR (FAN)	[M]
CN2809	K1KA12AA0424	12P CONNECTOR	[M]
CN2813	K1KB12B00036	12P CONNECTOR	[M]
CN2816	K1KB09BA0045	9P CONNECTOR	[M]
CN2817	K1KA09AA0031	9P CONNECTOR	[M]
CN5801	RJT119W12V	12P CONNECTOR	[M]
CN5805	RJT119W08V	8P CONNECTOR	[M]
CN5901	K1KA04BA0061	4P CONNECTOR	[M]
CP1301	K1MN05A00019	5P CONNECTOR	[M]
CP1902	K1KA09B00058	9P CONNECTOR	[M]
CP5802	K1KA12AA0424	12P CONNECTOR	[M]
CP5803	K1KA12AA0424	12P CONNECTOR	[M]
CS971	RJU071H09M1	9P CONNECTOR	[M]
FP8101	K1MN50B00031	50P CONNECTOR	[M]
FP8201	K1MN06B00080	6P CONNECTOR	[M]
FP8501	K1MN26B00094	26P CONNECTOR	[M]
HW601	K1ZZ00000832	CONNECTOR	[M]
P611	REX1216Y	3P WIRE	[M]
		COILS & TRANSFORMERS	
L1301	7L1A62N	BIAS OCS COIL	[M]
L1302	G0C470JA0052	RF CHOKE COIL	[M]
L2101	J0JBC0000019	CHIP INDUCTOR	[M]
L2201	J0JBC0000019	CHIP INDUCTOR	[M]
L2801	G0C3R3JA0027	COIL	[M]
L2802	G0A101ZA0028	CHOKE COIL	[M]
L2803	G0A200D00002	RF CHOKE COIL	[M]
L2804	G0A200D00002	RF CHOKE COIL	[M]
L2805	G0A200D00002	RF CHOKE COIL	[M]
L2806	G0A101ZA0028	CHOKE COIL	[M]
L2807	G0A200D00002	RF CHOKE COIL	[M]
L2808	G0C4R7JA0027	COIL	[M]
L2809	ELESN220JA	CHOKE COIL	[M]
L2810	J0JBC0000015	CHIP INDUCTOR	[M]
L2811	J0JBC0000015	CHIP INDUCTOR	[M]
L2812	J0JBC0000015	CHIP INDUCTOR	[M]
L2813	J0JCC0000186	CHIP COIL	[M]
L2814	J0JBC0000015	CHIP INDUCTOR	[M]
L2815	J0JBC0000015	CHIP INDUCTOR	[M]
L2817	G0C101JA0052	INDUCTOR	[M]
L2820	G0C470JA0052	RF CHOKE COIL	[M]
L2821	ELJFC2R2KF	CHIP COIL	[M]
L2822	ELJFC2R2KF	CHIP COIL	[M]
L2823	ELJFC2R2KF	CHIP COIL	[M]
L2824	G0C4R7JA0027	COIL	[M]
L2829	J0JCC0000120	COIL	[M]

Ref. No.	Part No.	Part Name & Description	Remarks
L2830	J0JCC0000120	COIL	[M]
L2831	J0JCC0000120	COIL	[M]
L2840	G0A200D00002	RF CHOKE COIL	[M]
L2911	ELJFCR39KF	CHIP COIL	[M]
L5101	G0AR76Y00001	COIL	[M]
L5102	G0AR76Y00001	COIL	[M]
L5201	G0AR76Y00001	COIL	[M]
L5202	G0AR76Y00001	COIL	[M]
L5901	G0B371HA0005	LINE FILTER	[M] ⚠
L8201	G1C100K00020	CHIP INDUCTOR	[M]
L8202	J0JCC0000079	CHIP INDUCTOR	[M]
L8301	G1C100KA0055	CHIP INDUCTOR	[M]
L8302	J0JCC0000079	CHIP INDUCTOR	[M]
L8550	G1C100KA0055	CHIP INDUCTOR	[M]
T1	ENG06810QF	TUNER	[M]
T5901	G4C6AFK00008	TRANSFORMER	[M] ⚠
T5902	G4C2AAJ00007	SUB-TRANSFORMER	[M] ⚠
		COMPONENT COMBINATIONS	
Z602	B3RAD0000051	REMOTE SENSOR	[M]
Z5901	ERZVA5Z471	ZENER	[M] ⚠
		RELAY	
RL5901	K6B1AEA00003	POWER RELAY	[M] ⚠
		OSCILLATORS	
X2801	H0A327200115	CRYSTAL OSCILLATOR	[M]
X2802	H2B100500004	CERAMIC RESONATOR	[M]
X8621	H0J270500085	CRYSTAL	[M]
		DISPLAY TUBES	
FL601	A2BD00000112	FL DISPLAY	[M]
FL8101	F1H0J1050022	CHIP CAPACITOR	[M]
FL8102	F1H0J1050022	CHIP CAPACITOR	[M]
FL8103	F1H0J1050022	CHIP CAPACITOR	[M]
FL8104	F1J1E1040022	CHIP CAPACITOR	[M]
		FUSE	
F1	K5D801BK0007	800MA FUSE	[M] ⚠
		FUSE HOLDERS	
FC1	EYF52BCY	FUSE CLIP	[M]
FC2	EYF52BCY	FUSE CLIP	[M]
		FUSE PROTECTORS	

Ref. No.	Part No.	Part Name & Description	Remarks
FP5801	K5G400A00001	RESISTOR	[M] ⚠
FP5901	K5G402A00025	FUSE PROTECTOR	[M] ⚠
FP5902	K5G102A00023	FUSE PROTECTOR	[M] ⚠
		HOLDERS	
H5804	K1YF08000003	8P WIRE HOLDER	[M]
H5902	K1YF12000002	12P WIRE HOLDER	[M]
		JACKS	
JK1000	K4BC04B00060	JK RED/BLACK SPEAKER	[M]
JK1001	K4BC04B00059	JK BLUE/HOAR SPEAKER	[M]
JK2800	K4BK01B00009	JK 1P RCA	[M]
JK2801	K4BK02B00008	JK AUX-IN	[M]
JK2802	K1U208B00005	JK	[M]
JK2803	K7AABB000004	JK OPTICAL (OUT)	[M]
JK2804	K2HC103B0162	JK HEADPHONE	[M]
JK2806	K2HA306B0068	JK	[M]
JK5901	K2AA2B000009	JK AC INLET	[M] ⚠
		EARTH TERMINALS	
E601	K9ZZ00000424	EARTH TERMINAL	[M]
E602	K9ZZ00000424	EARTH TERMINAL	[M]
E5801	SNE1004-2	EARTH TERMINAL	[M]
E5802	SNE1004-2	EARTH TERMINAL	[M]
		CHIP RESISTORS	
W71	ERJ3GEY0R00V	CHIP JUMPER	[M]
W72	ERJ3GEY0R00V	CHIP JUMPER	[M]
W73	ERJ3GEY0R00V	CHIP JUMPER	[M]
W74	ERJ3GEY0R00V	CHIP JUMPER	[M]
W81	ERJ3GEY0R00V	CHIP JUMPER	[M]
W82	ERJ3GEY0R00V	CHIP JUMPER	[M]
W83	ERJ3GEY0R00V	CHIP JUMPER	[M]
W84	ERJ3GEY0R00V	CHIP JUMPER	[M]
W85	ERJ3GEY0R00V	CHIP JUMPER	[M]
W86	ERJ3GEY0R00V	CHIP JUMPER	[M]
W87	ERJ3GEY0R00V	CHIP JUMPER	[M]
W3000	ERJ8GEY0R00V	CHIP JUMPER	[M]
W3001	ERJ8GEY0R00V	CHIP JUMPER	[M]
W3002	ERJ8GEY0R00V	CHIP JUMPER	[M]
W3003	ERJ8GEY0R00V	CHIP JUMPER	[M]
W3004	ERJ8GEY0R00V	CHIP JUMPER	[M]
W3005	ERJ8GEY0R00V	CHIP JUMPER	[M]
W3006	ERJ8GEY0R00V	CHIP JUMPER	[M]
W5922	ERDS2TJ2R2T	CARBON RESISTOR	[M]
WA1	ERJ3GEY0R00V	CHIP JUMPER	[M]
WA2	ERJ3GEY0R00V	CHIP JUMPER	[M]
WA3	ERJ3GEY0R00V	CHIP JUMPER	[M]

Ref. No.	Part No.	Part Name & Description	Remarks
WA4	ERJ3GEY0R00V	CHIP JUMPER	[M]
WA5	ERJ6GEY0R00V	CHIP JUMPER	[M]
WA6	ERJ6GEY0R00V	CHIP JUMPER	[M]
		WIRES	
WR601	REXX0398	4P WIRE	[M]
WR1308A	RWJ0102190KK	2P (CASS OPEN-DECK)	[M]
WR1308B	RWJ0102190KK	2P (CASS OPEN-DECK)	[M]
WR1903	RWJ0102050KR	2P (MOTOR WIRE)	[M]
		RESISTORS	
R601	ERJ3GEYJ103V	10K 1/16W	[M]
R602	D0GB223JA041	22K 1/16W	[M]
R603	ERJ3GEYJ122V	1.2K 1/16W	[M]
R604	D0GB182JA007	1.8K 1/16W	[M]
R605	D0GB222JA041	2.2K 1/16W	[M]
R606	D0GB272JA007	2.7K 1/16W	[M]
R607	ERJ3GEYJ102V	1K 1/16W	[M]
R608	ERJ3GEYJ102V	1K 1/16W	[M]
R609	ERJ3GEYJ122V	1.2K 1/16W	[M]
R612	ERJ3GEYJ102V	1K 1/16W	[M]
R613	ERJ3GEYJ102V	1K 1/16W	[M]
R616	D0GB472JA041	4.7K 1/16W	[M]
R617	D0GB562JA007	5.6K 1/16W	[M]
R618	D0GB101JA007	100 1/16W	[M]
R619	D0GB470JA008	47 1/16W	[M]
R620	ERJ3GEYJ682V	6.8K 1/16W	[M]
R621	D0GB151JA007	150 1/16W	[M]
R622	D0GB151JA007	150 1/16W	[M]
R623	D0GB104JA007	100K 1/16W	[M]
R624	D0GB104JA007	100K 1/16W	[M]
R625	ERJ3GEYJ102V	1K 1/16W	[M]
R626	ERJ3GEYJ102V	1K 1/16W	[M]
R627	ERJ3GEYJ102V	1K 1/16W	[M]
R628	ERJ3GEYJ102V	1K 1/16W	[M]
R629	ERJ3GEYJ103V	10K 1/16W	[M]
R630	ERJ3GEYJ103V	10K 1/16W	[M]
R631	D0GB471JA041	470 1/16W	[M]
R632	D0GB471JA041	470 1/16W	[M]
R633	D0GB471JA041	470 1/16W	[M]
R634	D0GB471JA041	470 1/16W	[M]
R643	ERJ3GEYJ102V	1K 1/16W	[M]
R644	D0GB821JA007	820 1/16W	[M]
R645	D0GB472JA041	4.7K 1/16W	[M]
R652	D0GB333JA007	33K 1/16W	[M]
R653	ERJ3GEYJ102V	1K 1/16W	[M]
R661	D0GB182JA007	1.8K 1/16W	[M]
R662	D0GB222JA041	2.2K 1/16W	[M]
R663	D0GB472JA041	4.7K 1/16W	[M]
R664	D0GB272JA007	2.7K 1/16W	[M]
R665	ERJ3GEYJ682V	6.8K 1/16W	[M]
R680	D0GB271JA007	270 1/16W	[M]

Ref. No.	Part No.	Part Name & Description	Remarks
R972	ERDS2TJ821T	820 1/4W	[M]
R973	ERDS2TJ393T	39K 1/4W	[M]
R1061	ERJ3GEY0R00V	0 1/16W	[M]
R1063	ERJ3GEY0R00V	0 1/16W	[M]
R1101	D0GB330JA007	33 1/16W	[M]
R1102	D0GB152JA007	1.5K 1/16W	[M]
R1103	D0GB183JA007	18K 1/16W	[M]
R1104	ERJ3GEYJ103V	10K 1/16W	[M]
R1105	D0GB222JA041	2.2K 1/16W	[M]
R1106	D0GB104JA007	100K 1/16W	[M]
R1107	ERJ3GEYJ102V	1K 1/16W	[M]
R1109	ERJ3GEYJ102V	1K 1/16W	[M]
R1110	D0GB333JA007	33K 1/16W	[M]
R1201	D0GB330JA007	33 1/16W	[M]
R1202	D0GB152JA007	1.5K 1/16W	[M]
R1203	D0GB183JA007	18K 1/16W	[M]
R1204	ERJ3GEYJ103V	10K 1/16W	[M]
R1205	D0GB222JA041	2.2K 1/16W	[M]
R1206	D0GB104JA007	100K 1/16W	[M]
R1207	ERJ3GEYJ102V	1K 1/16W	[M]
R1209	ERJ3GEYJ102V	1K 1/16W	[M]
R1210	D0GB333JA007	33K 1/16W	[M]
R1302	D0GB471JA041	470 1/16W	[M]
R1303	ERJ3GEYJ475V	4.7M 1/16W	[M]
R1304	D0GB223JA041	22K 1/16W	[M]
R1305	ERJ3GEYJ103V	10K 1/16W	[M]
R1309	D0AF471JA039	470 1/4W	[M]
R1313	ERJ3GEYJ103V	10K 1/16W	[M]
R1314	ERJ3GEYJ102V	1K 1/16W	[M]
R1318	ERJ3GEYJ103V	10K 1/16W	[M]
R1327	D0GB472JA041	4.7K 1/16W	[M]
R1328	D0GB153JA007	15K 1/16W	[M]
R1329	D0GB472JA041	4.7K 1/16W	[M]
R1330	ERD2FCVJ4R7T	4.7 1/4W	[M]
R1331	ERJ3GEYJ752V	7.5K 1/16W	[M]
R1332	ERJ3GEYJ103V	10K 1/16W	[M]
R1333	ERD2FCVJ4R7T	4.7 1/4W	[M]
R1334	D0GB223JA041	22K 1/16W	[M]
R1335	D0GB152JA007	1.5K 1/16W	[M]
R1337	ERJ3GEYJ103V	10K 1/16W	[M]
R1338	D0GB472JA041	4.7K 1/16W	[M]
R1341	D0GB471JA041	470 1/16W	[M]
R1342	D0GB473JA041	47K 1/16W	[M]
R1343	D0GB332JA007	3.3K 1/16W	[M]
R1344	D0GB273JA007	27K 1/16W	[M]
R1345	ERJ3GEYJ102V	1K 1/16W	[M]
R1371	D0GB223JA041	22K 1/16W	[M]
R1374	D0GB471JA041	470 1/16W	[M]
R1380	ERJ3GEY0R00V	0 1/16W	[M]
R1401	D0GB123JA007	12K 1/16W	[M]
R1402	D0GB274JA007	270K 1/16W	[M]
R1403	ERJ3GEYJ103V	10K 1/16W	[M]
R1404	D0GB223JA041	22K 1/16W	[M]
R1405	ERJ3GEYJ103V	10K 1/16W	[M]

Ref. No.	Part No.	Part Name & Description	Remarks
R2001	ERJ3GEYJ103V	10K 1/16W	[M]
R2002	D0GB101JA007	100 1/16W	[M]
R2003	ERJ3GEY0R00V	0 1/16W	[M]
R2005	ERJ3GEYJ102V	1K 1/16W	[M]
R2006	ERJ3GEYJ102V	1K 1/16W	[M]
R2007	ERJ3GEYJ102V	1K 1/16W	[M]
R2008	ERJ3GEYJ103V	10K 1/16W	[M]
R2009	ERJ3GEYJ103V	10K 1/16W	[M]
R2011	D0AF100JA039	10 1/4W	[M]
R2012	ERJ3GEY0R00V	0 1/16W	[M]
R2015	D0GB104JA007	100K 1/16W	[M]
R2016	D0GB104JA007	100K 1/16W	[M]
R2020	ERJ3GEY0R00V	0 1/16W	[M]
R2024	ERJ3GEY0R00V	0 1/16W	[M]
R2033	ERJ3GEY0R00V	0 1/16W	[M]
R2034	ERJ3GEY0R00V	0 1/16W	[M]
R2035	D0GB101JA007	100 1/16W	[M]
R2040	ERJ3GEY0R00V	0 1/16W	[M]
R2050	D0GB823JA007	82K 1/16W	[M]
R2058	ERJ3GEY0R00V	0 1/16W	[M]
R2062	ERJ3GEY0R00V	0 1/16W	[M]
R2070	ERJ3GEY0R00V	0 1/16W	[M]
R2080	ERJ3GEY0R00V	0 1/16W	[M]
R2081	ERJ3GEY0R00V	0 1/16W	[M]
R2082	ERJ6GEY0R00V	0 1/10W	[M]
R2101	D0GB823JA007	82K 1/16W	[M]
R2102	D0GB472JA041	4.7K 1/16W	[M]
R2103	D0GB153JA007	15K 1/16W	[M]
R2104	D0GB223JA041	22K 1/16W	[M]
R2105	ERJ3GEY0R00V	0 1/16W	[M]
R2106	ERJ3GEYJ103V	10K 1/16W	[M]
R2107	D0GB392JA007	3.9K 1/16W	[M]
R2108	ERJ3GEYJ102V	1K 1/16W	[M]
R2109	D0GB223JA041	22K 1/16W	[M]
R2111	D0GB182JA007	1.8K 1/16W	[M]
R2112	D0GB392JA007	3.9K 1/16W	[M]
R2113	D0GB472JA041	4.7K 1/16W	[M]
R2114	D0GB123JA007	12K 1/16W	[M]
R2115	D0GB473JA041	47K 1/16W	[M]
R2116	D0GB182JA007	1.8K 1/16W	[M]
R2118	D0GB472JA041	4.7K 1/16W	[M]
R2119	D0GB223JA041	22K 1/16W	[M]
R2120	D0GB393JA041	39K 1/16W	[M]
R2121	ERJ3GEYJ103V	10K 1/16W	[M]
R2122	ERJ3GEYJ102V	1K 1/16W	[M]
R2123	D0GB104JA007	100K 1/16W	[M]
R2124	D0GB472JA041	4.7K 1/16W	[M]
R2125	D0GB123JA007	12K 1/16W	[M]
R2126	ERJ3GEYJ102V	1K 1/16W	[M]
R2127	D0GB104JA007	100K 1/16W	[M]
R2128	ERJ3GEYJ102V	1K 1/16W	[M]
R2129	D0GB220JA007	22 1/16W	[M]
R2130	D0GB220JA007	22 1/16W	[M]
R2131	D0GB332JA007	3.3K 1/16W	[M]

Ref. No.	Part No.	Part Name & Description	Remarks
R2201	D0GB823JA007	82K 1/16W	[M]
R2202	D0GB472JA041	4.7K 1/16W	[M]
R2203	D0GB153JA007	15K 1/16W	[M]
R2204	D0GB223JA041	22K 1/16W	[M]
R2205	ERJ3GEY0R00V	0 1/16W	[M]
R2206	ERJ3GEYJ103V	10K 1/16W	[M]
R2207	D0GB392JA007	3.9K 1/16W	[M]
R2208	ERJ3GEYJ102V	1K 1/16W	[M]
R2209	D0GB223JA041	22K 1/16W	[M]
R2211	D0GB182JA007	1.8K 1/16W	[M]
R2212	D0GB392JA007	3.9K 1/16W	[M]
R2213	D0GB123JA007	12K 1/16W	[M]
R2214	D0GB473JA041	47K 1/16W	[M]
R2215	D0GB182JA007	1.8K 1/16W	[M]
R2217	D0GB472JA041	4.7K 1/16W	[M]
R2218	D0GB223JA041	22K 1/16W	[M]
R2219	D0GB393JA041	39K 1/16W	[M]
R2220	ERJ3GEYJ103V	10K 1/16W	[M]
R2221	ERJ3GEYJ102V	1K 1/16W	[M]
R2222	D0GB104JA007	100K 1/16W	[M]
R2223	D0GB472JA041	4.7K 1/16W	[M]
R2224	D0GB123JA007	12K 1/16W	[M]
R2225	ERJ3GEYJ102V	1K 1/16W	[M]
R2226	D0GB104JA007	100K 1/16W	[M]
R2227	ERJ3GEYJ102V	1K 1/16W	[M]
R2228	D0GB220JA007	22 1/16W	[M]
R2229	D0GB220JA007	22 1/16W	[M]
R2230	D0GB332JA007	3.3K 1/16W	[M]
R2240	ERJ3GEYJ102V	1K 1/16W	[M]
R2241	ERJ3GEYJ102V	1K 1/16W	[M]
R2242	ERJ3GEYJ102V	1K 1/16W	[M]
R2243	ERJ3GEYJ102V	1K 1/16W	[M]
R2244	ERJ3GEYJ102V	1K 1/16W	[M]
R2245	ERJ3GEYJ102V	1K 1/16W	[M]
R2246	ERJ3GEY0R00V	0 1/16W	[M]
R2801	ERJ3GEYJ102V	1K 1/16W	[M]
R2802	ERJ3GEYJ102V	1K 1/16W	[M]
R2803	ERJ3GEYJ102V	1K 1/16W	[M]
R2804	ERJ3GEYJ102V	1K 1/16W	[M]
R2805	ERJ3GEYJ102V	1K 1/16W	[M]
R2808	ERJ3GEYJ103V	10K 1/16W	[M]
R2809	ERJ3GEYJ102V	1K 1/16W	[M]
R2810	ERJ3GEYJ103V	10K 1/16W	[M]
R2811	ERJ3GEYJ102V	1K 1/16W	[M]
R2812	ERJ3GEYJ102V	1K 1/16W	[M]
R2813	ERJ3GEYJ102V	1K 1/16W	[M]
R2814	ERJ3GEYJ102V	1K 1/16W	[M]
R2815	ERJ3GEYJ102V	1K 1/16W	[M]
R2816	ERJ3GEYJ102V	1K 1/16W	[M]
R2817	ERJ3GEYJ102V	1K 1/16W	[M]
R2818	ERJ6GEYJ102V	1K 1/10W	[M]
R2819	ERJ3GEYJ102V	1K 1/16W	[M]
R2820	ERJ3GEYJ102V	1K 1/16W	[M]
R2821	ERJ6GEYJ102V	1K 1/10W	[M]

Ref. No.	Part No.	Part Name & Description	Remarks
R2822	ERJ3GEYJ103V	10K 1/16W	[M]
R2823	ERJ3GEYJ103V	10K 1/16W	[M]
R2824	D0GB223JA041	22K 1/16W	[M]
R2825	D0GB471JA041	470 1/16W	[M]
R2826	ERJ3GEYJ103V	10K 1/16W	[M]
R2827	D0GB472JA041	4.7K 1/16W	[M]
R2828	ERJ3GEYJ102V	1K 1/16W	[M]
R2829	ERJ3GEYJ102V	1K 1/16W	[M]
R2830	ERJ3GEYJ102V	1K 1/16W	[M]
R2831	ERJ3GEYJ102V	1K 1/16W	[M]
R2833	D0GB331JA007	330 1/16W	[M]
R2834	ERJ3GEYJ102V	1K 1/16W	[M]
R2835	ERJ3GEYJ102V	1K 1/16W	[M]
R2836	ERJ3GEYJ102V	1K 1/16W	[M]
R2837	ERJ3GEYJ102V	1K 1/16W	[M]
R2838	ERJ3GEYJ102V	1K 1/16W	[M]
R2839	ERJ3GEYJ102V	1K 1/16W	[M]
R2840	ERJ3GEYJ102V	1K 1/16W	[M]
R2841	ERJ3GEYJ102V	1K 1/16W	[M]
R2842	ERJ3GEYJ102V	1K 1/16W	[M]
R2843	ERJ3GEYJ102V	1K 1/16W	[M]
R2847	ERJ3GEYJ102V	1K 1/16W	[M]
R2848	ERJ3GEYJ102V	1K 1/16W	[M]
R2849	D0GB101JA007	100 1/16W	[M]
R2850	ERJ3GEYJ102V	1K 1/16W	[M]
R2853	D0GB101JA007	100 1/16W	[M]
R2854	D0GB101JA007	100 1/16W	[M]
R2856	ERJ3GEYJ102V	1K 1/16W	[M]
R2857	ERJ3GEYJ102V	1K 1/16W	[M]
R2858	ERJ3GEYJ102V	1K 1/16W	[M]
R2859	ERJ3GEYJ103V	10K 1/16W	[M]
R2860	ERJ3GEYJ103V	10K 1/16W	[M]
R2861	D0GB473JA041	47K 1/16W	[M]
R2862	ERJ3GEYJ102V	1K 1/16W	[M]
R2863	D0GB101JA007	100 1/16W	[M]
R2864	D0GB101JA007	100 1/16W	[M]
R2865	D0GB101JA007	100 1/16W	[M]
R2866	D0GB101JA007	100 1/16W	[M]
R2867	D0GB101JA007	100 1/16W	[M]
R2868	D0GB101JA007	100 1/16W	[M]
R2869	D0GB101JA007	100 1/16W	[M]
R2870	D0GB101JA007	100 1/16W	[M]
R2871	D0GB101JA007	100 1/16W	[M]
R2872	D0GB101JA007	100 1/16W	[M]
R2873	ERJ3GEYJ682V	6.8K 1/16W	[M]
R2874	ERJ3GEYJ103V	10K 1/16W	[M]
R2876	D0GB101JA007	100 1/16W	[M]
R2877	ERJ3GEYJ102V	1K 1/16W	[M]
R2878	ERJ3GEYJ103V	10K 1/16W	[M]
R2879	ERJ3GEYJ103V	10K 1/16W	[M]
R2880	ERJ3GEYJ103V	10K 1/16W	[M]
R2881	ERJ3GEYJ103V	10K 1/16W	[M]
R2882	ERJ3GEYJ103V	10K 1/16W	[M]
R2883	ERJ3GEYJ103V	10K 1/16W	[M]

Ref. No.	Part No.	Part Name & Description	Remarks
R2884	ERJ3GEYJ103V	10K 1/16W	[M]
R2885	ERJ3GEYJ103V	10K 1/16W	[M]
R2886	ERJ3GEYJ103V	10K 1/16W	[M]
R2887	D0GB223JA041	22K 1/16W	[M]
R2888	D0GB223JA041	22K 1/16W	[M]
R2889	D0GB223JA041	22K 1/16W	[M]
R2890	D0GB474JA041	470K 1/16W	[M]
R2895	D0GB334JA041	330K 1/16W	[M]
R2896	ERJ3GEYJ106V	10M 1/16W	[M]
R2897	D0GB473JA041	47K 1/16W	[M]
R2898	ERJ3GEYJ681V	680 1/16W	[M]
R2899	D0GB223JA041	22K 1/16W	[M]
R2900	D0GB123JA007	12K 1/16W	[M]
R2901	D0GB101JA007	100 1/16W	[M]
R2902	ERJ3GEYJ822V	8.2K 1/16W	[M]
R2903	D0GB222JA041	2.2K 1/16W	[M]
R2904	D0GB333JA007	33K 1/16W	[M]
R2905	D0GB104JA007	100K 1/16W	[M]
R2906	D0GB222JA041	2.2K 1/16W	[M]
R2907	D0GB222JA041	2.2K 1/16W	[M]
R2908	D0GB391JA041	390 1/16W	[M]
R2909	ERJ3GEYJ102V	1K 1/16W	[M]
R2910	ERJ3GEYJ750V	75 1/16W	[M]
R2912	D0GB222JA041	2.2K 1/16W	[M]
R2913	ERJ3GEYJ750V	75 1/16W	[M]
R2914	ERJ3GEYJ750V	75 1/16W	[M]
R2915	ERJ3GEYJ750V	75 1/16W	[M]
R2916	ERJ3GEYJ750V	75 1/16W	[M]
R2917	ERJ3GEYJ750V	75 1/16W	[M]
R2918	ERJ3GEYJ103V	10K 1/16W	[M]
R2919	ERJ3GEYJ103V	10K 1/16W	[M]
R2920	D0GB563JA007	56K 1/16W	[M]
R2921	D0GB472JA041	4.7K 1/16W	[M]
R2922	ERJ3GEYJ103V	10K 1/16W	[M]
R2923	D0GB562JA007	5.6K 1/16W	[M]
R2924	ERJ3GEYJ824V	820K 1/16W	[M]
R2925	D0GB101JA007	100 1/16W	[M]
R2926	D0GB563JA007	56K 1/16W	[M]
R2927	D0AF270JA039	27 1/4W	[M]
R2928	D0GB563JA007	56K 1/16W	[M]
R2929	ERJ3GEYJ103V	10K 1/16W	[M]
R2930	ERJ3GEYJ824V	820K 1/16W	[M]
R2935	D0GB221JA041	220 1/16W	[M]
R2936	D0GB332JA007	3.3K 1/16W	[M]
R2937	D0GB332JA007	3.3K 1/16W	[M]
R2938	D0GB392JA041	3.9K 1/16W	[M]
R2939	D0GB392JA041	3.9K 1/16W	[M]
R2940	D0GB821JA007	820 1/16W	[M]
R2941	ERJ3GEYJ102V	1K 1/16W	[M]
R2942	D0GB152JA007	1.5K 1/16W	[M]
R2943	ERJ3GEYJ102V	1K 1/16W	[M]
R2944	D0GB123JA007	12K 1/16W	[M]
R2945	D0GB123JA007	12K 1/16W	[M]
R2946	D0GB562JA007	5.6K 1/16W	[M]

Ref. No.	Part No.	Part Name & Description	Remarks
R2947	D0GB332JA007	3.3K 1/16W	[M]
R2948	D0GB123JA007	12K 1/16W	[M]
R2949	D0GB101JA007	100 1/16W	[M]
R2950	ERJ3GEYJ102V	1K 1/16W	[M]
R2955	D0GB273JA007	27K 1/16W	[M]
R2956	D0GB563JA007	56K 1/16W	[M]
R2957	ERJ3GEYJ103V	10K 1/16W	[M]
R2958	D0GB474JA041	470K 1/16W	[M]
R2959	ERJ3GEYJ102V	1K 1/16W	[M]
R2960	D0GB472JA041	4.7K 1/16W	[M]
R2961	D0GB474JA041	470K 1/16W	[M]
R2988	D0AF270JA039	27 1/4W	[M]
R2992	ERJ3GEYJ820V	82 1/16W	[M]
R2994	D0GB151JA007	150 1/16W	[M]
R3001	ERJ3GEYJ102V	1K 1/16W	[M]
R3002	ERJ3GEYJ102V	1K 1/16W	[M]
R3003	ERJ3GEYJ102V	1K 1/16W	[M]
R3004	ERJ3GEY0R00V	0 1/16W	[M]
R3100	D0GB273JA007	27K 1/16W	[M]
R3101	D0GB273JA007	27K 1/16W	[M]
R3102	ERJ3GEYJ103V	10K 1/16W	[M]
R3103	ERJ3GEYJ102V	1K 1/16W	[M]
R3104	ERJ3GEYJ103V	10K 1/16W	[M]
R3105	D0GB104JA007	100K 1/16W	[M]
R3106	D0GB104JA007	100K 1/16W	[M]
R3107	ERJ3GEYJ102V	1K 1/16W	[M]
R3108	D0GB104JA007	100K 1/16W	[M]
R3109	ERJ3GEYJ103V	10K 1/16W	[M]
R3110	D0GB104JA007	100K 1/16W	[M]
R3111	D0GB104JA007	100K 1/16W	[M]
R3112	D0GB333JA007	33K 1/16W	[M]
R3113	ERJ3GEYJ822V	8.2K 1/16W	[M]
R3114	D0GB104JA007	100K 1/16W	[M]
R3115	D0GB152JA007	1.5K 1/16W	[M]
R3116	ERJ3GEYJ103V	10K 1/16W	[M]
R3117	ERJ3GEYJ103V	10K 1/16W	[M]
R3118	ERJ3GEYJ102V	1K 1/16W	[M]
R3119	ERJ3GEYJ102V	1K 1/16W	[M]
R3120	ERJ3GEYJ103V	10K 1/16W	[M]
R3121	ERJ3GEYJ681V	680 1/16W	[M]
R3122	ERJ3GEYJ103V	10K 1/16W	[M]
R3123	ERJ3GEYJ103V	10K 1/16W	[M]
R3124	ERJ3GEYJ103V	10K 1/16W	[M]
R3125	ERJ3GEYJ103V	10K 1/16W	[M]
R3126	D0GB100JA007	10 1/16W	[M]
R3127	D0GB100JA007	10 1/16W	[M]
R3128	ERJ3GEYJ103V	10K 1/16W	[M]
R3129	ERJ3GEYJ103V	10K 1/16W	[M]
R3130	ERJ3GEYJ103V	10K 1/16W	[M]
R3131	D0GB472JA041	4.7K 1/16W	[M]
R3132	ERJ3GEYJ102V	1K 1/16W	[M]
R3133	ERJ3GEYJ103V	10K 1/16W	[M]
R3134	D0GB472JA041	4.7K 1/16W	[M]
R3135	ERJ3GEYJ102V	1K 1/16W	[M]

Ref. No.	Part No.	Part Name & Description	Remarks
R3136	ERJ3GEYJ103V	10K 1/16W	[M]
R3137	D0GB472JA041	4.7K 1/16W	[M]
R3138	D0GB472JA041	4.7K 1/16W	[M]
R3139	D0GB472JA041	4.7K 1/16W	[M]
R3140	D0GB472JA041	4.7K 1/16W	[M]
R5101	D0AE221JA048	220 1/4W	[M]
R5102	ERDS2TJ682T	6.8K 1/4W	[M]
R5103	ERDS2TJ682T	6.8K 1/4W	[M]
R5104	ERDS2TJ333T	33K 1/4W	[M]
R5105	D0AE472JA048	4.7K 1/4W	[M]
R5106	ERDS2TJ152T	1.5K 1/4W	[M]
R5107	D0AE153JA048	15K 1/4W	[M]
R5108	D0AE472JA048	4.7K 1/4W	[M]
R5109	ERDS2TJ823T	82K 1/4W	[M]
R5110	D0AE104JA048	100K 1/4W	[M]
R5111	D0AE103JA048	10K 1/4W	[M]
R5113	D0AF100JA039	10 1/4W	[M]
R5151	ERDS2TJ392T	3.9K 1/4W	[M]
R5152	ERDS2TJ183T	18K 1/4W	[M]
R5153	D0AE472JA048	4.7K 1/4W	[M]
R5154	ERDS2TJ102T	1K 1/4W	[M]
R5155	D0AE153JA048	15K 1/4W	[M]
R5156	D0AE272JA048	2.7K 1/4W	[M]
R5157	ERDS2TJ823T	82K 1/4W	[M]
R5158	ERDS2TJ124T	120K 1/4W	[M]
R5159	D0AE223JA048	22K 1/4W	[M]
R5161	D0AF100JA039	10 1/4W	[M]
R5162	D0AE472JA048	4.7K 1/4W	[M]
R5201	D0AE221JA048	220 1/4W	[M]
R5202	ERDS2TJ682T	6.8K 1/4W	[M]
R5203	ERDS2TJ682T	6.8K 1/4W	[M]
R5204	ERDS2TJ333T	33K 1/4W	[M]
R5205	D0AE472JA048	4.7K 1/4W	[M]
R5206	ERDS2TJ152T	1.5K 1/4W	[M]
R5207	D0AE153JA048	15K 1/4W	[M]
R5208	D0AE472JA048	4.7K 1/4W	[M]
R5209	ERDS2TJ823T	82K 1/4W	[M]
R5210	ERDS2TJ683T	68K 1/4W	[M]
R5211	D0AE103JA048	10K 1/4W	[M]
R5213	D0AF100JA039	10 1/4W	[M]
R5251	ERDS2TJ392T	3.9K 1/4W	[M]
R5252	ERDS2TJ183T	18K 1/4W	[M]
R5253	D0AE472JA048	4.7K 1/4W	[M]
R5254	ERDS2TJ102T	1K 1/4W	[M]
R5255	D0AE153JA048	15K 1/4W	[M]
R5256	D0AE272JA048	2.7K 1/4W	[M]
R5257	ERDS2TJ823T	82K 1/4W	[M]
R5258	ERDS2TJ124T	120K 1/4W	[M]
R5259	D0AE223JA048	22K 1/4W	[M]
R5261	D0AF100JA039	10 1/4W	[M]
R5262	D0AE472JA048	4.7K 1/4W	[M]
R5801	ERDS1FVJ2R7T	2.7 1/2W	[M]
R5802	ERDS1FVJ2R7T	2.7 1/2W	[M]
R5803	ERDS2TJ332T	3.3K 1/4W	[M]

Ref. No.	Part No.	Part Name & Description	Remarks
R5804	ERDS2TJ151T	150 1/4W	[M]
R5805	ERDS2TJ391T	390 1/4W	[M]
R5806	D0AE272JA048	2.7K 1/4W	[M]
R5807	D0AF270JA039	27 1/4W	[M]
R5808	D0AF150JA039	15 1/4W	[M]
R5809	ERDS2TJ332T	3.3K 1/4W	[M]
R5810	D0AE272JA048	2.7K 1/4W	[M]
R5811	ERDS2TJ2R2T	2.2 1/4W	[M]
R5812	ERDS2TJ2R2T	2.2 1/4W	[M]
R5813	ERDS2TJ2R2T	2.2 1/4W	[M]
R5814	D0AE122JA048	1.2K 1/4W	[M]
R5815	D0AE103JA048	10K 1/4W	[M]
R5818	D0AE331JA048	330 1/4W	[M]
R5819	ERD25FVJ270T	27 1/4W	[M]
R5820	ERD25FVJ270T	27 1/4W	[M]
R5822	D0AE473JA048	47K 1/4W	[M]
R5823	D0AE473JA048	47K 1/4W	[M]
R5824	D0AF331JA039	330 1/4W	[M]
R5825	D0AF331JA039	330 1/4W	[M]
R5826	D0AF331JA039	330 1/4W	[M]
R5827	ERDS2TJ823T	82K 1/4W	[M]
R5828	D0AE123JA048	12K 1/4W	[M]
R5829	D0AE223JA048	22K 1/4W	[M]
R5830	D0AE103JA048	10K 1/4W	[M]
R5831	ERDS2TJ332T	3.3K 1/4W	[M]
R5832	ERDS1FVJ2R7T	2.7 1/2W	[M]
R5833	ERDS1FVJ2R7T	2.7 1/2W	[M]
R5834	ERX1SZJR18P	0.18 1W	[M]
R5835	ERX1SZJR18P	0.18 1W	[M]
R5902	ERDS1FVJ4R7T	4.7 1/2W	[M]
R5903	D0AE472JA048	4.7K 1/4W	[M]
R5904	ERDS2TJ151T	150 1/4W	[M]
R5905	ERDS2TJ332T	3.3K 1/4W	[M]
R5906	D0AE103JA048	10K 1/4W	[M]
R5907	D0AE103JA048	10K 1/4W	[M]
R5908	ERDS2TJ821T	820 1/4W	[M]
R5911	ERDS2TJ151T	150 1/4W	[M]
R5912	D0AF100JA039	10 1/4W	[M]
R5913	D0AF100JA039	10 1/4W	[M]
R5914	D0AF180JA039	18 1/4W	[M]
R8011	ERJ2GEJ220X	22 2W	[M]
R8021	ERJ2GEJ103X	10K 2W	[M]
R8022	ERJ2GEJ103X	10K 2W	[M]
R8023	ERJ2GEJ473X	47K 2W	[M]
R8041	ERJ2GEJ330X	33 2W	[M]
R8111	ERJ2GEJ223X	22K 2W	[M]
R8112	ERJ2GEJ223X	22K 2W	[M]
R8201	ERJ2GEJ222X	2.2K 2W	[M]
R8231	ERJ2GEJ103X	10K 2W	[M]
R8233	ERJ2GEJ153X	15K 2W	[M]
R8235	ERJ2GEJ822X	8.2K 2W	[M]
R8236	ERJ2GEJ822X	8.2K 2W	[M]
R8241	ERJ2GEJ223X	22K 2W	[M]
R8242	ERJ2GEJ752X	7.5K 2W	[M]

Ref. No.	Part No.	Part Name & Description	Remarks
R8243	ERJ2GEJ103X	10K 2W	[M]
R8251	ERJ6GEYJ6R8V	6.8 1/10W	[M]
R8261	ERJ2GEJ823X	82K 2W	[M]
R8262	ERJ2GEJ472X	4.7K 2W	[M]
R8263	ERJ2GEJ823X	82K 2W	[M]
R8264	ERJ2GEJ472X	4.7K 2W	[M]
R8265	ERJ2GE0R00X	0 2W	[M]
R8311	ERJ2RHD242X	2.4K 2W	[M]
R8312	ERJ2RHD102X	1K 2W	[M]
R8313	ERJ2RHD243X	24K 2W	[M]
R8314	ERJ2GE0R00X	0 2W	[M]
R8315	ERJ2GEJ6R8X	6.8 2W	[M]
R8321	ERJ3RBD161V	160 3W	[M]
R8322	ERJ2RKD100X	10 2W	[M]
R8325	ERJ3RBD161V	160 3W	[M]
R8326	ERJ2GE0R00X	0 2W	[M]
R8331	ERJ3RBD161V	160 3W	[M]
R8332	ERJ2RKD100X	10 2W	[M]
R8335	ERJ3RED820V	82 3W	[M]
R8341	ERJ3RED820V	82 3W	[M]
R8401	ERJ2GEJ473X	47K 2W	[M]
R8402	ERJ2GEJ101X	100 2W	[M]
R8404	ERJ2GEJ101X	100 2W	[M]
R8407	ERJ2GEJ101X	100 2W	[M]
R8420	ERJ2GEJ222X	2.2K 2W	[M]
R8421	ERJ2GE0R00X	0 2W	[M]
R8501	ERJ2GE0R00X	0 2W	[M]
R8505	ERJ2GEJ222X	2.2K 2W	[M]
R8506	ERJ2GEJ152X	1.5K 2W	[M]
R8550	ERJ2GEJ752X	7.5K 2W	[M]
R8551	ERJ2GE0R00X	0 2W	[M]
R8552	ERJ2GEJ102X	1K 2W	[M]
R8553	ERJ2GEJ102X	1K 2W	[M]
R8554	ERJ2GEJ680X	68 2W	[M]
R8555	ERJ2GEJ2R2X	2.2 2W	[M]
R8556	ERJ3GEYJ560V	56 1/16W	[M]
R8557	ERJ3GEYJ510V	51 1/16W	[M]
R8558	ERJ2GEJ473X	47K 2W	[M]
R8559	ERJ2GEJ153X	15K 2W	[M]
R8560	ERJ2GEJ102X	1K 2W	[M]
R8561	ERJ2GE0R00X	0 2W	[M]
R8562	ERJ2GEJ102X	1K 2W	[M]
R8563	ERJ2GEJ102X	1K 2W	[M]
R8564	ERJ2GEJ220X	22 2W	[M]
R8565	ERJ2GEJ2R2X	2.2 2W	[M]
R8566	ERJ3GEYJ560V	56 1/16W	[M]
R8567	ERJ3GEYJ510V	51 1/16W	[M]
R8568	ERJ2GEJ473X	47K 2W	[M]
R8569	ERJ2GEJ123X	12K 2W	[M]
R8570	ERJ2GEJ104X	100K 2W	[M]
R8601	ERJ2GEJ102X	1K 2W	[M]
R8606	ERJ2GEJ104X	100K 2W	[M]
R8607	ERJ2GEJ103X	10K 2W	[M]
R8611	ERJ2GEJ101X	100 2W	[M]

Ref. No.	Part No.	Part Name & Description	Remarks
R8621	ERJ2GEJ105X	1M 2W	[M]
R8622	ERJ2RHD271X	270 2W	[M]
RX8011	D1H88204A024	CHIP RESISTOR	[M]
RX8012	D1H88204A024	CHIP RESISTOR	[M]
RX8013	D1H88204A024	CHIP RESISTOR	[M]
RX8014	D1H88204A024	CHIP RESISTOR	[M]
RX8015	D1H422020001	CHIP RESISTOR	[M]
RX8016	D1H88204A024	CHIP RESISTOR	[M]
RX8017	D1H88204A024	CHIP RESISTOR	[M]
RX8018	D1H88204A024	CHIP RESISTOR	[M]
RX8021	D1H410320002	CHIP RESISTOR	[M]
RX8031	D1H447220001	CHIP RESISTOR	[M]
RX8032	D1H447220001	CHIP RESISTOR	[M]
RX8401	D1H410120001	CHIP RESISTOR	[M]
RX8402	D1H410120001	CHIP RESISTOR	[M]
RX8501	D1H456020001	CHIP RESISTOR	[M]
RX8502	D1H85604A024	CHIP RESISTOR	[M]
RX8503	D1H456020001	CHIP RESISTOR	[M]
RX8504	D1H456020001	CHIP RESISTOR	[M]
RX8611	D1H447220001	CHIP RESISTOR	[M]
K8002	ERJ2GE0R00X	CHIP JUMPER	[M]
K8005	ERJ2GE0R00X	CHIP JUMPER	[M]
K8007	ERJ2GE0R00X	CHIP JUMPER	[M]
K8010	ERJ2GE0R00X	CHIP JUMPER	[M]
K8031	ERJ2GE0R00X	CHIP JUMPER	[M]
K8106	ERJ3GEY0R00V	CHIP JUMPER	[M]
K8421	ERJ3GEY0R00V	CHIP JUMPER	[M]
		CAPACITORS	
C11	F1D1E103A001	0.01 25V	[M]
C12	F2A1C101A234	100P 16V	[M]
C21	F1D1E103A001	0.01 25V	[M]
C22	F2A1C101A234	100P 16V	[M]
C601	ECJ1VC1H101K	100P 50V	[M]
C602	ECJ1VC1H101K	100P 50V	[M]
C603	F1H1H103A219	0.01 50V	[M]
C604	F2A0J470A245	47P 6.3V	[M]
C621	F2A1H220A234	22P 50V	[M]
C622	F2A1H220A234	22P 50V	[M]
C623	F2A1H220A234	22P 50V	[M]
C624	F2A1H220A234	22P 50V	[M]
C625	F1H1H103A219	0.01 50V	[M]
C626	ECJ1VC1H102J	1000P 50V	[M]
C627	F1H1H101A230	100P 50V	[M]
C628	F1H1H101A230	100P 50V	[M]
C629	ECJ1VB1A105K	1 10V	[M]
C630	F2A0J101A245	100P 6.3V	[M]
C631	ECJ1VC1H101K	100P 50V	[M]
C632	ECJ1VB1A105K	1 10V	[M]
C633	F2A0J101A245	100P 6.3V	[M]
C634	F1H1H102A219	1000P 50V	[M]

Ref. No.	Part No.	Part Name & Description	Remarks
C638	ECJ1VB1A105K	1 10V	[M]
C657	ECJ1VB1A105K	1 10V	[M]
C1101	ECA1HAK010XB	1 50V	[M]
C1102	F1H1H471A219	470P 50V	[M]
C1103	ECA1CAK101XB	100 16V	[M]
C1104	F1H1C2730001	0.027 16V	[M]
C1105	F1H1H471A219	470P 50V	[M]
C1106	ECA1HAK2R2XB	2.2 50V	[M]
C1107	F1H1H152A219	1500P 50V	[M]
C1108	ECA1CAK100XB	10 16V	[M]
C1109	ECA1HAK3R3XB	3.3 50V	[M]
C1110	F1H1H682A219	6800P 50V	[M]
C1121	F1H1H102A219	1000P 50V	[M]
C1122	F1H1H103A219	0.01 50V	[M]
C1123	ECJ1VB1H271K	270P 50V	[M]
C1201	ECA1HAK010XB	1 50V	[M]
C1202	F1H1H471A219	470P 50V	[M]
C1203	ECA1CAK101XB	100 16V	[M]
C1204	F1H1C2730001	0.027 16V	[M]
C1205	F1H1H471A219	470P 50V	[M]
C1206	ECA1HAK2R2XB	2.2 50V	[M]
C1207	F1H1H152A219	1500P 50V	[M]
C1208	ECA1CAK100XB	10 16V	[M]
C1209	ECA1HAK3R3XB	3.3 50V	[M]
C1210	F1H1H682A219	6800P 50V	[M]
C1221	F1H1H102A219	1000P 50V	[M]
C1222	F1H1H103A219	0.01 50V	[M]
C1223	ECJ1VB1H271K	270P 50V	[M]
C1301	ECA1HAK0R1XB	0.1 50V	[M]
C1302	F1H1C3330001	0.033 16V	[M]
C1303	F1H1C3330001	0.033 16V	[M]
C1304	ECA1HAK4R7XB	4.7 50V	[M]
C1305	ECA1CAK330XB	33 16V	[M]
C1307	ECA1AAK221XQ	220 10V	[M]
C1308	ECA1CAK220XB	22 16V	[M]
C1310	ECA1HAK0R1XB	0.1 50V	[M]
C1311	ECA1CAK470XB	47 16V	[M]
C1312	F1H1H332A013	3300P 50V	[M]
C1314	F1H1H222A013	2200P 50V	[M]
C1315	F1H1H222A013	2200P 50V	[M]
C1316	F1H1H102A219	1000P 50V	[M]
C1317	F1H1H102A219	1000P 50V	[M]
C1318	ECQV1H473JL3	0.047 50V	[M]
C1319	ECA1CAK101XB	100 16V	[M]
C1320	ECA1HAK010XB	1 50V	[M]
C1321	F0A2A472A019	4700P 100V	[M]
C1323	ECEA1HKN010B	1 50V	[M]
C1324	ECA1CAK470XB	47 16V	[M]
C1326	ECA1CAK100XB	10 16V	[M]
C1371	F1H1H103A219	0.01 50V	[M]
C2004	ECJ1VF1A105Z	1 10V	[M]
C2005	ECJ1VF1A105Z	1 10V	[M]
C2101	ECJ1VB1E473K	0.047 25V	[M]
C2102	F1H1H331A013	330P 50V	[M]

Ref. No.	Part No.	Part Name & Description	Remarks
C2103	ECA1CAK100XB	10 16V	[M]
C2104	F1H1H102A219	1000P 50V	[M]
C2105	ECA1CAK100XB	10 16V	[M]
C2106	ECJ1VC1H221J	220P 50V	[M]
C2107	ECA1CAK100XB	10 16V	[M]
C2108	F1H1H102A219	1000P 50V	[M]
C2109	ECA1CAK100XB	10 16V	[M]
C2110	F1H1H101A230	100P 50V	[M]
C2111	ECA1CAK100XB	10 16V	[M]
C2112	F1H1H101A230	100P 50V	[M]
C2113	ECA1CAK100XB	10 16V	[M]
C2114	F1H1H222A013	2200P 50V	[M]
C2115	ECJ1VB1C153K	0.015 16V	[M]
C2116	ECJ1VB1C153K	0.015 16V	[M]
C2117	F1H1A154A001	0.15 10V	[M]
C2118	F1H1A154A001	0.15 10V	[M]
C2119	ECA1CAK100XB	10 16V	[M]
C2120	ECA1HAK010XB	1 50V	[M]
C2122	F1H1H102A219	1000P 50V	[M]
C2126	F1H1H470A230	47P 50V	[M]
C2127	F1H1C2730001	0.027 16V	[M]
C2128	ECA1CAK100XB	10 16V	[M]
C2129	F1H1H102A219	1000P 50V	[M]
C2130	ECA1CAK220XB	22 16V	[M]
C2131	ECA1HAKR22XB	0.22 50V	[M]
C2132	F1H1H332A013	3300P 50V	[M]
C2201	ECJ1VB1E473K	0.047 25V	[M]
C2202	F1H1H331A013	330P 50V	[M]
C2203	ECA1CAK100XB	10 16V	[M]
C2204	F1H1H102A219	1000P 50V	[M]
C2205	ECA1CAK100XB	10 16V	[M]
C2206	ECJ1VC1H221J	220P 50V	[M]
C2207	ECA1CAK100XB	10 16V	[M]
C2208	F1H1H102A219	1000P 50V	[M]
C2209	ECA1CAK100XB	10 16V	[M]
C2210	F1H1H101A230	100P 50V	[M]
C2211	ECA1CAK100XB	10 16V	[M]
C2212	F1H1H101A230	100P 50V	[M]
C2213	ECA1CAK100XB	10 16V	[M]
C2214	ECJ2VB1E223K	0.022 25V	[M]
C2215	F1H1H222A013	2200P 50V	[M]
C2216	ECJ1VB1C153K	0.015 16V	[M]
C2217	ECJ1VB1C153K	0.015 16V	[M]
C2218	F1H1A154A001	0.15 10V	[M]
C2219	F1H1A154A001	0.15 10V	[M]
C2220	ECA1CAK100XB	10 16V	[M]
C2221	ECA1HAK010XB	1 50V	[M]
C2223	F1H1H102A219	1000P 50V	[M]
C2227	F1H1H470A230	47P 50V	[M]
C2228	F1H1C2730001	0.027 16V	[M]
C2229	ECA1CAK100XB	10 16V	[M]
C2230	F1H1H102A219	1000P 50V	[M]
C2231	ECA1CAK220XB	22 16V	[M]
C2232	ECA1HAKR22XB	0.22 50V	[M]

Ref. No.	Part No.	Part Name & Description	Remarks
C2233	F1H1H332A013	3300P 50V	[M]
C2235	F1H1H103A219	0.01 50V	[M]
C2237	ECA1HAK010XB	1 50V	[M]
C2801	F1H1H101A230	100P 50V	[M]
C2802	F1H1H101A230	100P 50V	[M]
C2803	F1H1H101A230	100P 50V	[M]
C2804	F1H1H101A230	100P 50V	[M]
C2805	F1H1H101A230	100P 50V	[M]
C2806	F1H1H101A230	100P 50V	[M]
C2810	F1H1H101A230	100P 50V	[M]
C2811	F1H1H101A230	100P 50V	[M]
C2812	F1H1H101A230	100P 50V	[M]
C2813	F1H1H471A219	470P 50V	[M]
C2814	F1H1H471A219	470P 50V	[M]
C2815	F1H1H471A219	470P 50V	[M]
C2816	F1H1H101A230	100P 50V	[M]
C2817	F1H1H101A230	100P 50V	[M]
C2818	F1H1H101A230	100P 50V	[M]
C2819	F1H1H101A230	100P 50V	[M]
C2820	F1H1H471A219	470P 50V	[M]
C2821	F1H1H103A219	0.01 50V	[M]
C2822	F1H1H471A219	470P 50V	[M]
C2823	F1H1H103A219	0.01 50V	[M]
C2824	ECA1AAK220XB	22 10V	[M]
C2825	F1H1H101A230	100P 50V	[M]
C2826	F1H1H101A230	100P 50V	[M]
C2827	F1H1H101A230	100P 50V	[M]
C2828	F1H1H101A230	100P 50V	[M]
C2829	F1H1H101A230	100P 50V	[M]
C2830	F1H1H101A230	100P 50V	[M]
C2831	ECJ2VB1E223K	0.022 25V	[M]
C2832	ECJ1VC1H221J	220P 50V	[M]
C2839	ECJ1VC1H220J	22P 50V	[M]
C2840	F1H1H1800001	18P 50V	[M]
C2841	ECA0JAK101XB	100 6.3V	[M]
C2842	F1H1C104A008	0.1 16V	[M]
C2843	ECA1AAM102XB	1000 10V	[M]
C2844	F1H1H101A230	100P 50V	[M]
C2845	ECA1HAK010XB	1 50V	[M]
C2846	ECA1HAK2R2XB	2.2 50V	[M]
C2847	F1H1H103A219	0.01 50V	[M]
C2848	ECA1AAK220XB	22 10V	[M]
C2849	EEUFC0J821B	820P 6.3V	[M]
C2850	F1J1H104A459	0.1 50V	[M]
C2851	ECA1EAM331XB	330 25V	[M]
C2852	EEUFC0J821B	820P 6.3V	[M]
C2853	F1J1H104A459	0.1 50V	[M]
C2854	ECJ1VF1A105Z	1 10V	[M]
C2855	ECA1EAM331XB	330 25V	[M]
C2856	ECA1CAK470XB	47 16V	[M]
C2857	ECA0JM471B	470 6.3V	[M]
C2858	F1J1H104A459	0.1 50V	[M]
C2859	ECA1CAK100XB	10 16V	[M]
C2860	ECA1AAK221XB	220 10V	[M]

Ref. No.	Part No.	Part Name & Description	Remarks
C2861	F1J1H104A459	0.1 50V	[M]
C2862	ECA1CAK470XB	47 16V	[M]
C2863	ECA1CAM471XB	470 16V	[M]
C2864	F1J1H104A459	0.1 50V	[M]
C2865	F1H1H102A219	1000P 50V	[M]
C2866	F1H1H102A219	1000P 50V	[M]
C2867	F1H1H101A230	100P 50V	[M]
C2868	F1H1H101A230	100P 50V	[M]
C2869	F1H1H101A230	100P 50V	[M]
C2871	F1H1H103A219	0.01 50V	[M]
C2872	F1J1H104A459	0.1 50V	[M]
C2873	ECEA0JKA220B	22 6.3V	[M]
C2874	ECJ1VF1A105Z	1 10V	[M]
C2875	ECJ1VF1A105Z	1 10V	[M]
C2876	ECJ1VF1A105Z	1 10V	[M]
C2878	F1H1H103A219	0.01 50V	[M]
C2879	ECEA0JKA220B	22 6.3V	[M]
C2880	F1J1H104A459	0.1 50V	[M]
C2881	ECA0JAM102XB	1000 6.3V	[M]
C2882	ECA0JAM102XB	1000 6.3V	[M]
C2883	ECA0JAM102XB	1000 6.3V	[M]
C2884	ECA0JAM102XB	1000 6.3V	[M]
C2885	ECA0JAM102XB	1000 6.3V	[M]
C2888	ECA1CAK330XB	33 16V	[M]
C2889	F1J1H104A459	0.1 50V	[M]
C2890	F1H1H101A230	100P 50V	[M]
C2891	ECA1CAK470XB	47 16V	[M]
C2892	ECA0JAK101XB	100 6.3V	[M]
C2893	ECA1AAK221XB	220 10V	[M]
C2894	ECA1HAK2R2XB	2.2 50V	[M]
C2895	F1H1H102A219	1000P 50V	[M]
C2896	F1H1H101A230	100P 50V	[M]
C2897	ECA1HAK4R7XB	4.7 50V	[M]
C2909	F1H1H101A230	100P 50V	[M]
C2910	ECJ1VC1H220J	22P 50V	[M]
C2911	ECJ1VB1H271K	270P 50V	[M]
C2912	F1H1H331A013	330P 50V	[M]
C2913	ECJ1VC1H220J	22P 50V	[M]
C2914	ECJ1VB1H271K	270P 50V	[M]
C2915	F1H1H331A013	330P 50V	[M]
C2916	ECJ1VC1H220J	22P 50V	[M]
C2917	ECJ1VB1H271K	270P 50V	[M]
C2918	F1H1H331A013	330P 50V	[M]
C2919	ECJ1VB1E473K	0.047 25V	[M]
C2920	ECJ1VB1E473K	0.047 25V	[M]
C2923	ECA1HAK4R7XB	4.7 50V	[M]
C2924	F1J1H104A459	0.1 50V	[M]
C2925	F1J1H104A459	0.1 50V	[M]
C2926	ECEA1AKA101B	100 10V	[M]
C2927	F1H1H470A230	47P 50V	[M]
C2928	F1H1H470A230	47P 50V	[M]
C2929	ECA1CAK100XB	10 16V	[M]
C2930	F1J1H104A459	0.1 50V	[M]
C2932	ECJ1VB1C823K	0.082 16V	[M]

Ref. No.	Part No.	Part Name & Description	Remarks
C2933	ECJ1VB1C823K	0.082 16V	[M]
C2934	ECA1CAK100XB	10 16V	[M]
C2935	F1H1H103A219	0.01 50V	[M]
C2936	F1H1H103A219	0.01 50V	[M]
C2937	ECEA1HKN4R7B	4.7 50V	[M]
C2986	F1H1H101A230	100P 50V	[M]
C2988	F1H1H101A230	100P 50V	[M]
C2989	F1H1H101A230	100P 50V	[M]
C2994	ECJ1VC1H220J	22P 50V	[M]
C3000	ECJ1VC1H221J	220P 50V	[M]
C3001	ECA1CAK100XB	10 16V	[M]
C3002	ECA1HAK010XB	1 50V	[M]
C3003	F1H1H473A748	0.047 50V	[M]
C3004	ECJ2VB1E104K	0.1 25V	[M]
C3005	ECJ1VB1H473K	0.047 50V	[M]
C3006	ECA1HAK4R7XB	4.7 50V	[M]
C3007	ECJ1VC1H221J	220P 50V	[M]
C3008	ECJ1VC1H221J	220P 50V	[M]
C3009	ECA1HAK2R2XB	2.2 50V	[M]
C3010	ECA1HAK2R2XB	2.2 50V	[M]
C3011	ECA1CAK100XB	10 16V	[M]
C3012	ECA1CAK100XB	10 16V	[M]
C3013	ECA1HAKR68XB	0.68 50V	[M]
C3014	ECA1HAK010XB	1 50V	[M]
C5101	F1D1H102A012	1000P 50V	[M]
C5102	F1E1H1030001	0.01 50V	[M]
C5103	F1D1C272A010	2700P 16V	[M]
C5104	ECA1HAKR68XB	0.68 50V	[M]
C5105	F1D1H821A012	820P 50V	[M]
C5106	F1D1H150A015	15P 50V	[M]
C5107	F1D1H682A046	6800P 50V	[M]
C5108	F1D1H473A012	0.047 50V	[M]
C5151	F1D1H152A046	1500P 50V	[M]
C5152	F1D1C562A010	5600P 16V	[M]
C5153	ECA1HAKR22XB	0.22 50V	[M]
C5154	F1D1H821A012	820P 50V	[M]
C5155	F1D1H150A015	15P 50V	[M]
C5156	F1D1H682A046	6800P 50V	[M]
C5157	F1D1H473A012	0.047 50V	[M]
C5158	F1D1H1040002	0.1 50V	[M]
C5201	F1D1H102A012	1000P 50V	[M]
C5202	F1E1H1030001	0.01 50V	[M]
C5203	F1D1C272A010	2700P 16V	[M]
C5204	ECA1HAKR68XB	0.68 50V	[M]
C5205	F1D1H821A012	820P 50V	[M]
C5206	F1D1H150A015	15P 50V	[M]
C5207	F1D1H682A046	6800P 50V	[M]
C5208	F1D1H473A012	0.047 50V	[M]
C5251	F1D1H152A046	1500P 50V	[M]
C5252	F1D1C562A010	5600P 16V	[M]
C5253	ECA1HAKR22XB	0.22 50V	[M]
C5254	F1D1H821A012	820P 50V	[M]
C5255	F1D1H150A015	15P 50V	[M]
C5256	F1D1H682A046	6800P 50V	[M]

Ref. No.	Part No.	Part Name & Description	Remarks
C5257	F1D1H473A012	0.047 50V	[M]
C5258	F1D1H1040002	0.1 50V	[M]
C5801	ECQE2104KF3	0.1 250V	[M]
C5802	ECA1HM332E	3300 50V	[M]
C5803	ECA1HM332E	3300 50V	[M]
C5804	ECA1EAM332XE	3300 25V	[M]
C5805	F1B1H103A007	0.01 50V	[M]
C5806	ECA1CAK101XB	100 16V	[M]
C5807	ECA1CAK100XB	10 16V	[M]
C5808	F1B2H103A032	0.01 500V	[M]
C5809	ECA1HAK100XB	10 50V	[M]
C5810	ECA1CAK100XB	10 16V	[M]
C5811	ECA1CAK101XB	100 16V	[M]
C5812	F1B2H103A032	0.01 500V	[M]
C5813	ECA1CAK100XB	10 16V	[M]
C5814	F1B1H103A007	0.01 50V	[M]
C5817	F1E1H1030001	0.01 50V	[M]
C5819	F1B2H103A032	0.01 500V	[M]
C5820	F1D1H102A012	1000P 50V	[M]
C5821	ECA0JM471B	470 6.3V	[M]
C5901	ECA1HM101B	100 50V	[M]
C5902	ECA2AM101B	100 100V	[M]
C5903	F1B1H103A007	0.01 50V	[M]
C5904	ECA2AM100B	10 100V	[M]
C5905	ECA1HAM470XB	47 50V	[M]
C5906	ECQE2104KF3	0.1 250V	[M]
C5907	ECA1HAK4R7XB	4.7 50V	[M]
C5908	F1B1H103A007	0.01 50V	[M]
C5909	F1B1H103A007	0.01 50V	[M]
C5912	F2A1C1020029	1000P 16V	[M]
C5914	F1B1H103A007	0.01 50V	[M]
C5915	ECA1HAM470XB	47 50V	[M]
C5916	ECA1HAM470XB	47 50V	[M]
C5917	F1B1H103A007	0.01 50V	[M]
C8001	F2G0J101A066	100P 6.3V	[M]
C8002	F2G0G331A012	330P 4V	[M]
C8003	ECJ0EB1E222K	2200P 25V	[M]
C8004	ECJ0EF1C104Z	0.1 16V	[M]
C8005	ECJ0EF1C104Z	0.1 16V	[M]
C8006	ECJ0EF1C104Z	0.1 16V	[M]
C8007	ECJ0EF1C104Z	0.1 16V	[M]
C8008	ECJ0EF1C104Z	0.1 16V	[M]
C8009	ECJ0EF1C104Z	0.1 16V	[M]
C8010	ECJ0EF1C104Z	0.1 16V	[M]
C8011	ECJ1VB0J105K	1 6.3V	[M]
C8012	ECJ0EF1C104Z	0.1 16V	[M]
C8013	ECJ0EF1C104Z	0.1 16V	[M]
C8014	ECJ0EF1C104Z	0.1 16V	[M]
C8015	ECJ1VB0J105K	1 6.3V	[M]
C8016	ECJ1VB0J105K	1 6.3V	[M]
C8017	ECJ0EF1C104Z	0.1 16V	[M]
C8018	ECJ0EF1C104Z	0.1 16V	[M]
C8019	ECJ1VB0J105K	1 6.3V	[M]
C8020	ECJ0EF1C104Z	0.1 16V	[M]

Ref. No.	Part No.	Part Name & Description	Remarks
C8021	ECJ0EF1C104Z	0.1 16V	[M]
C8022	ECJ0EF1C104Z	0.1 16V	[M]
C8023	ECJ1VB0J105K	1 6.3V	[M]
C8024	ECJ1VB0J105K	1 6.3V	[M]
C8025	ECJ0EF1C104Z	0.1 16V	[M]
C8026	ECJ0EB1E222K	2200P 25V	[M]
C8027	ECJ0EF1C104Z	0.1 16V	[M]
C8028	ECJ1VB0J105K	1 6.3V	[M]
C8031	ECJ0EF1C104Z	0.1 16V	[M]
C8051	ECJ1VB0J105K	1 6.3V	[M]
C8052	ECJ0EF1C104Z	0.1 16V	[M]
C8053	ECJ0EC1H221J	220P 50V	[M]
C8054	ECJ1VB0J105K	1 6.3V	[M]
C8055	ECJ1VB0J105K	1 6.3V	[M]
C8056	ECJ0EF1C104Z	0.1 16V	[M]
C8057	ECJ0EB1E222K	2200P 25V	[M]
C8111	ECJ0EB1A104K	0.1 10V	[M]
C8112	ECJ1VB0J105K	1 6.3V	[M]
C8113	ECJ0EB1E471K	470P 25V	[M]
C8201	F2G0J101A031	100P 6.3V	[M]
C8202	F2G0J101A066	100P 6.3V	[M]
C8203	ECJ0EF1C104Z	0.1 16V	[M]
C8204	ECJ0EF1C104Z	0.1 16V	[M]
C8205	ECJ0EF1C104Z	0.1 16V	[M]
C8206	ECJ1VB0J105K	1 6.3V	[M]
C8207	F1H1C104A008	0.1 16V	[M]
C8208	ECJ0EF1C104Z	0.1 16V	[M]
C8211	ECJ0EB1A333K	0.033 10V	[M]
C8212	ECJ0EF1C104Z	0.1 16V	[M]
C8213	ECJ0EF1C104Z	0.1 16V	[M]
C8214	ECJ0EF1C104Z	0.1 16V	[M]
C8215	ECJ0EB1E562K	5600P 25V	[M]
C8216	ECJ0EB1C183K	0.018 16V	[M]
C8217	ECJ1VB0J105K	1 6.3V	[M]
C8218	ECJ1VB0J105K	1 6.3V	[M]
C8221	ECJ0EB1A104K	0.1 10V	[M]
C8222	ECJ0EB1A104K	0.1 10V	[M]
C8223	ECJ0EB1A104K	0.1 10V	[M]
C8224	ECJ0EB1A104K	0.1 10V	[M]
C8225	ECJ0EF1C104Z	0.1 16V	[M]
C8226	ECJ0EF1C104Z	0.1 16V	[M]
C8227	ECJ0EF1C104Z	0.1 16V	[M]
C8228	ECJ1VB0J105K	1 6.3V	[M]
C8229	ECJ1VB0J105K	1 6.3V	[M]
C8232	F1H1C104A008	0.1 16V	[M]
C8233	ECJ0EB1E472K	4700P 25V	[M]
C8234	ECJ0EF1C104Z	0.1 16V	[M]
C8235	ECJ0EB1H102K	1000P 50V	[M]
C8236	ECJ0EB1H102K	1000P 50V	[M]
C8237	ECJ0EB1H102K	1000P 50V	[M]
C8238	ECJ0EB1H821K	820P 50V	[M]
C8241	ECJ0EB1A104K	0.1 10V	[M]
C8242	ECJ0EB1A104K	0.1 10V	[M]
C8251	F2G0J221A065	220P 6.3V	[M]

Ref. No.	Part No.	Part Name & Description	Remarks
C8252	F2G1C470A076	47P 16V	[M]
C8253	F2G1C220A037	22P 16V	[M]
C8254	ECJ0EF1C104Z	0.1 16V	[M]
C8255	ECJ0EF1C104Z	0.1 16V	[M]
C8256	ECJ0EF1C104Z	0.1 16V	[M]
C8257	ECJ0EF1C104Z	0.1 16V	[M]
C8261	ECJ0EF1C104Z	0.1 16V	[M]
C8262	ECJ0EF1C104Z	0.1 16V	[M]
C8301	F2G0J221A031	220P 6.3V	[M]
C8302	F2G0J330A031	33P 6.3V	[M]
C8303	ECJ0EF1C104Z	0.1 16V	[M]
C8304	ECJ1VB0J105K	1 6.3V	[M]
C8307	ECJ0EF1C104Z	0.1 16V	[M]
C8308	ECJ0EC1H150J	15P 50V	[M]
C8311	ECJ0EF1C104Z	0.1 16V	[M]
C8312	ECJ1VB0J105K	1 6.3V	[M]
C8421	F2G0J101A015	100P 6.3V	[M]
C8422	ECJ0EF1C104Z	0.1 16V	[M]
C8423	F2G0J330A015	33P 6.3V	[M]
C8424	ECJ0EF1C104Z	0.1 16V	[M]
C8426	ECJ0EF1C104Z	0.1 16V	[M]
C8427	ECJ0EF1C104Z	0.1 16V	[M]
C8428	ECJ0EF1C104Z	0.1 16V	[M]
C8501	F1K1A1060017	10 10V	[M]
C8502	ECJ0EF1C104Z	0.1 16V	[M]
C8503	ECJ0EF1C104Z	0.1 16V	[M]
C8504	ECJ0EF1C104Z	0.1 16V	[M]
C8505	ECJ0EC1H221J	220P 50V	[M]
C8506	ECJ0EC1H101J	100P 50V	[M]
C8550	F2G0J330A031	33P 6.3V	[M]
C8551	ECJ0EF1C104Z	0.1 16V	[M]
C8552	F2G1C100A072	10P 16V	[M]
C8553	F2G0J470A031	47P 6.3V	[M]
C8554	ECJ1VB0J105K	1 6.3V	[M]
C8561	ECJ0EF1C104Z	0.1 16V	[M]
C8562	F2G1C100A072	10P 16V	[M]
C8563	F2G0J470A031	47P 6.3V	[M]
C8564	ECJ1VB0J105K	1 6.3V	[M]
C8601	ECJ0EF1C104Z	0.1 16V	[M]
C8606	ECJ0EF1C104Z	0.1 16V	[M]
C8607	ECJ0EB0J224K	0.22 6.3V	[M]
C8611	ECJ0EF1C104Z	0.1 16V	[M]
C8621	ECJ0EC1H120J	12P 50V	[M]
C8622	ECJ0EC1H120J	12P 50V	[M]
C8651	ECJ0EF1C104Z	0.1 16V	[M]
C8652	ECJ0EF1C104Z	0.1 16V	[M]
C8691	ECJ0EF1C104Z	0.1 16V	[M]
C8695	ECJ0EF1C104Z	0.1 16V	[M]

26.5. Packing Materials & Accessories Parts List

Ref. No.	Part No.	Part Name & Description	Remarks
		PACKING MATERIALS	
P1	RPGV0214	PACKING CASE	[M]
P2	RPNV0049	POLYFOAM	[M]
P3	RPHV0001-1	MIRAMAT SHEET	[M]
		ACCESSORIES	
A1	N2QAJB000145	REMOTE CONTROL	[M]
A1-1	RKK-HTR0051K	R/C BATTERY COVER	[M]
A2	K2CJ2DA00008	AC CORD	[M] ⚠
A3	RQT7937-B	O/I BOOK (En)	[M]
A4	RSA0007-L	FM ANTENNA WIRE	[M]
A5	N1DAAAA00001	AM LOOP ANTENNA	[M]
A6	RJL1P016B15A	VIDEO CABLE	[M]

26.6. Packaging

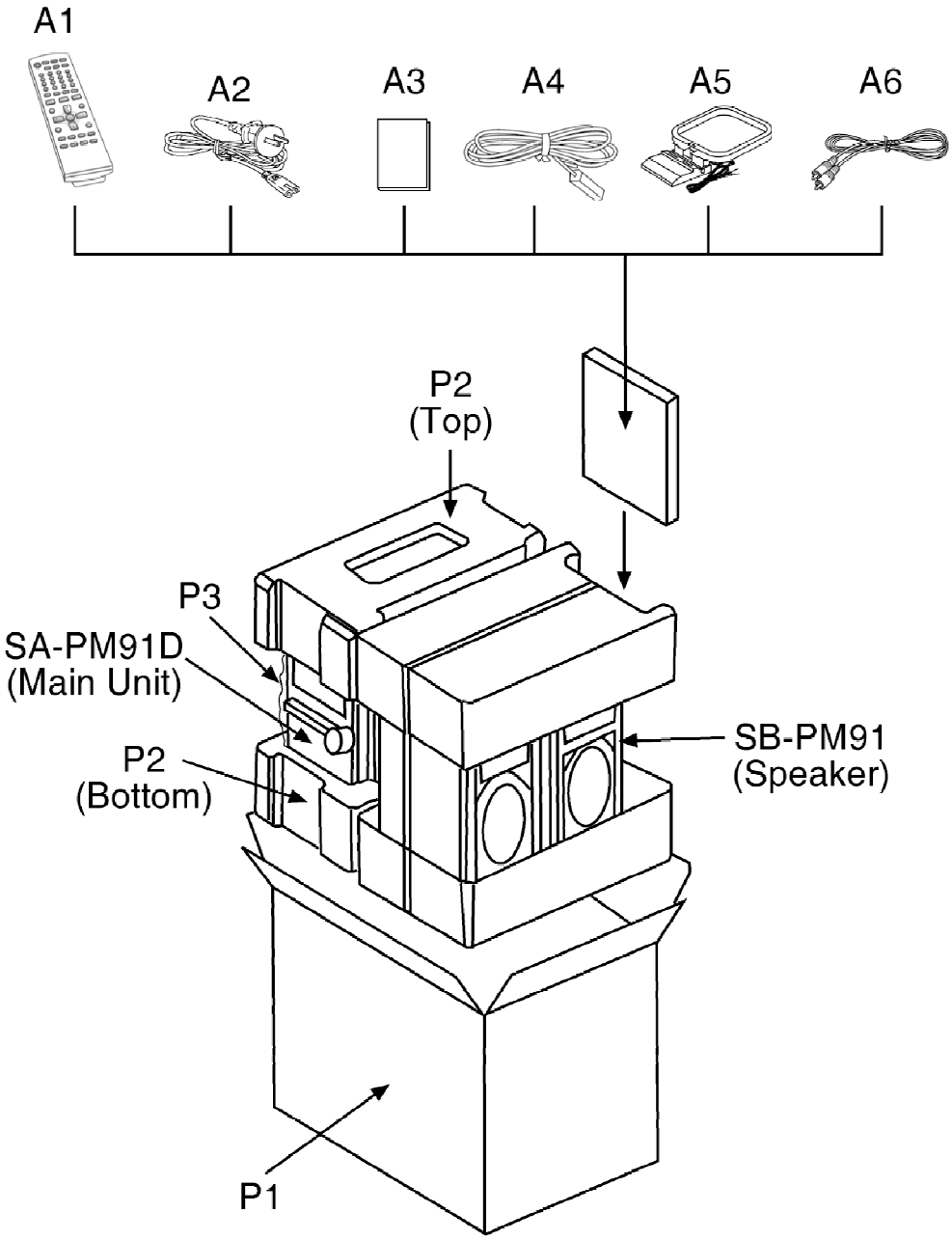

FLE0504 D/E/J/M/S/A

A DVD MODULE P.C.B (REPV0057C)

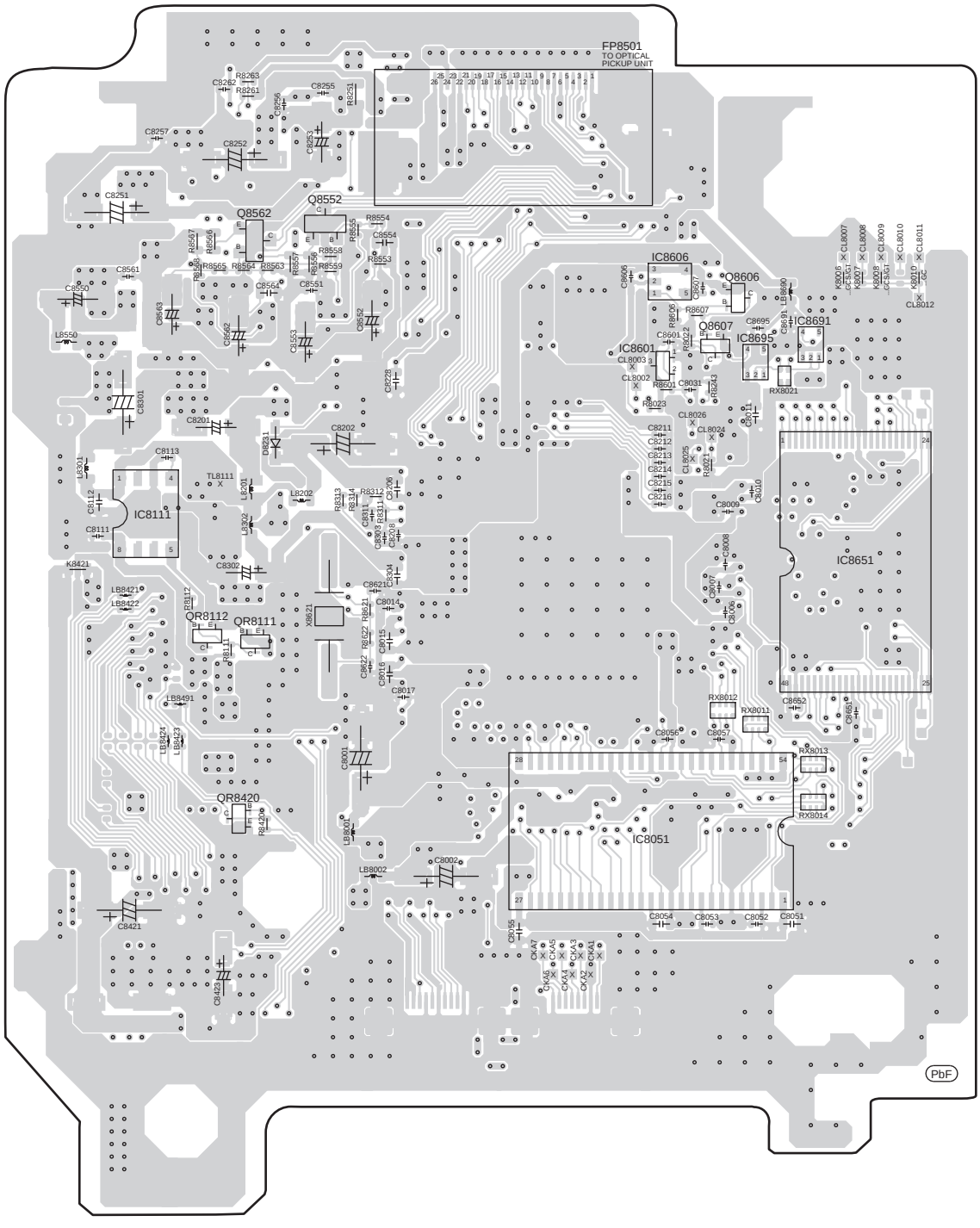

(SIDE A)

A DVD MODULE P.C.B (REPV0057C)

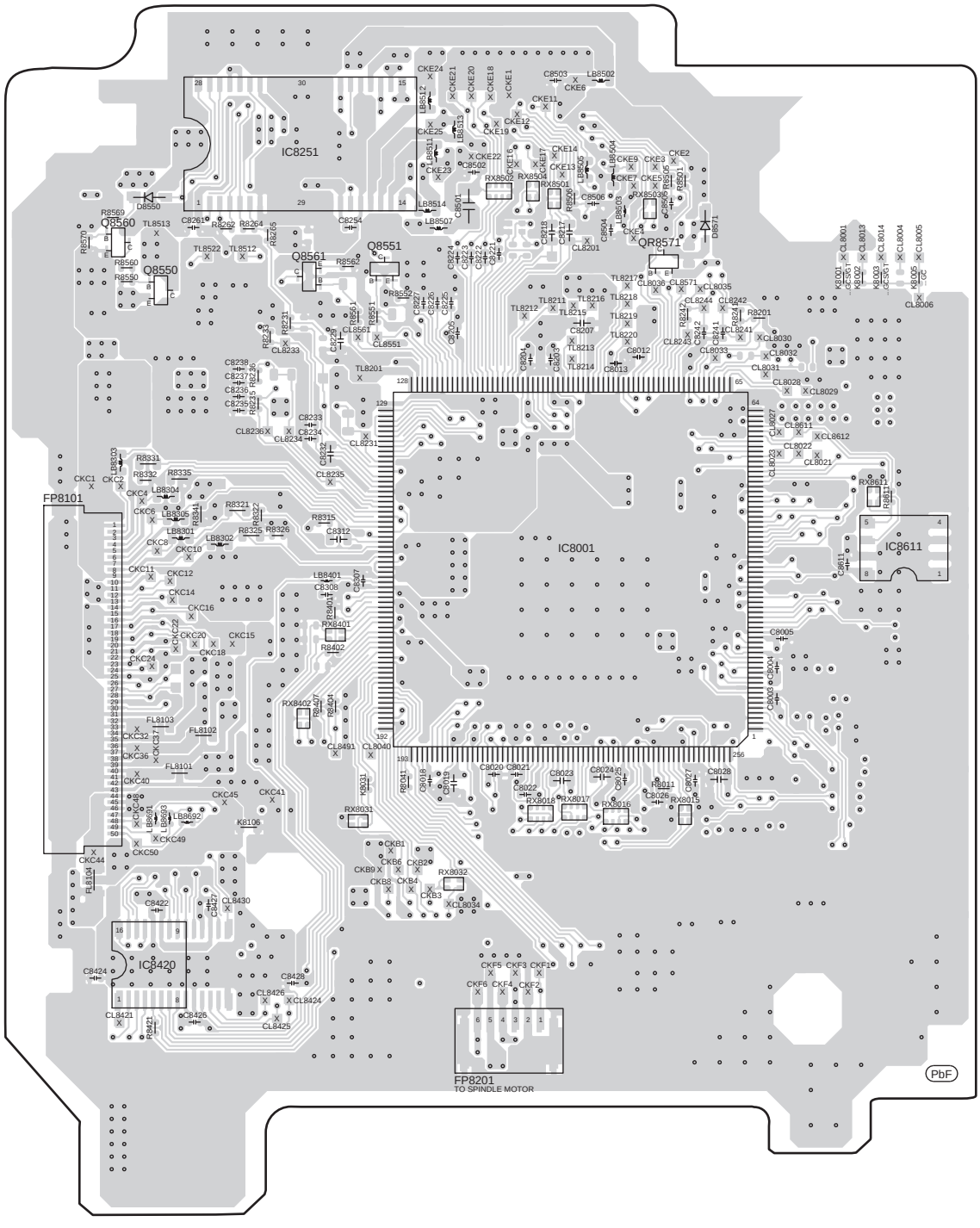

(SIDE B)

B MAIN P.C.B (REPV0054F)

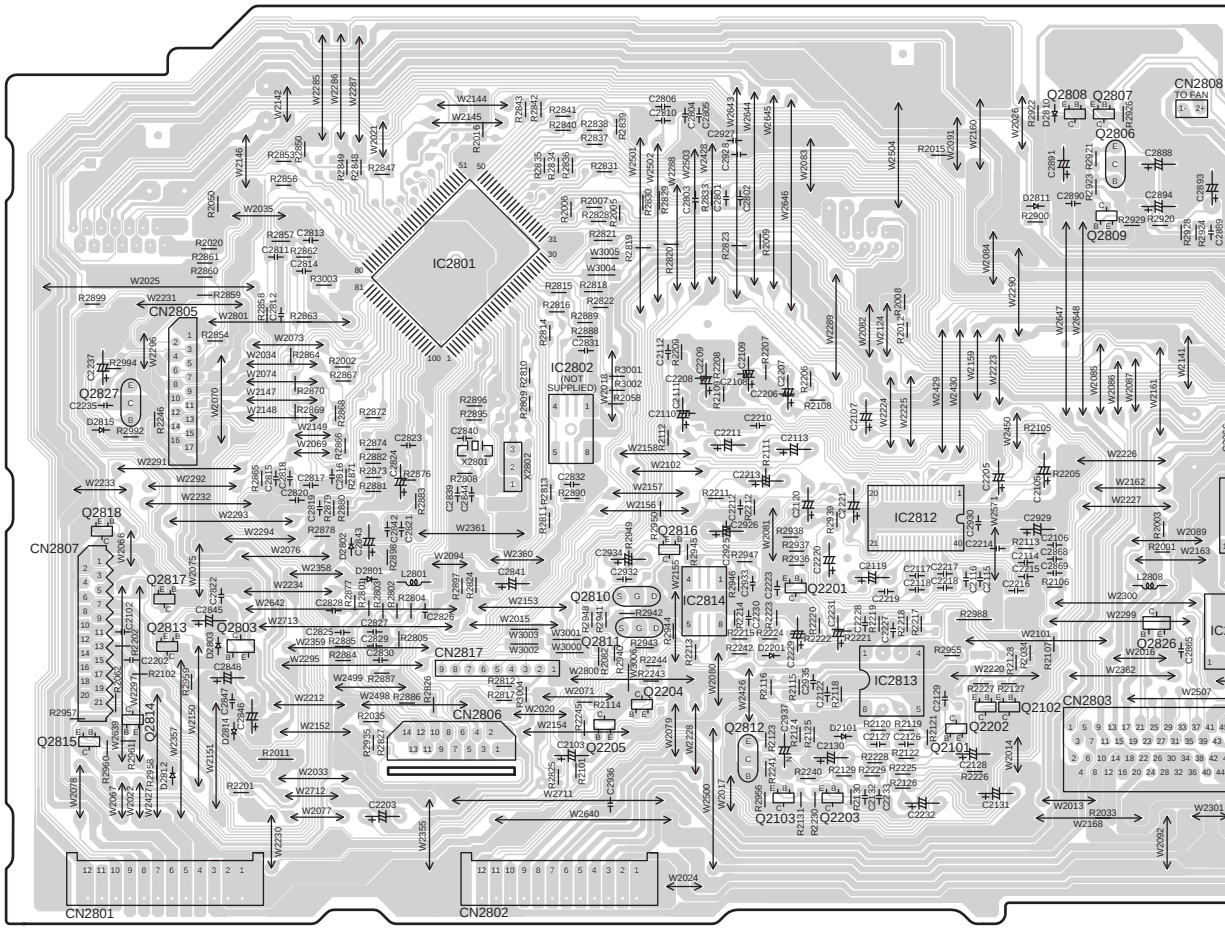

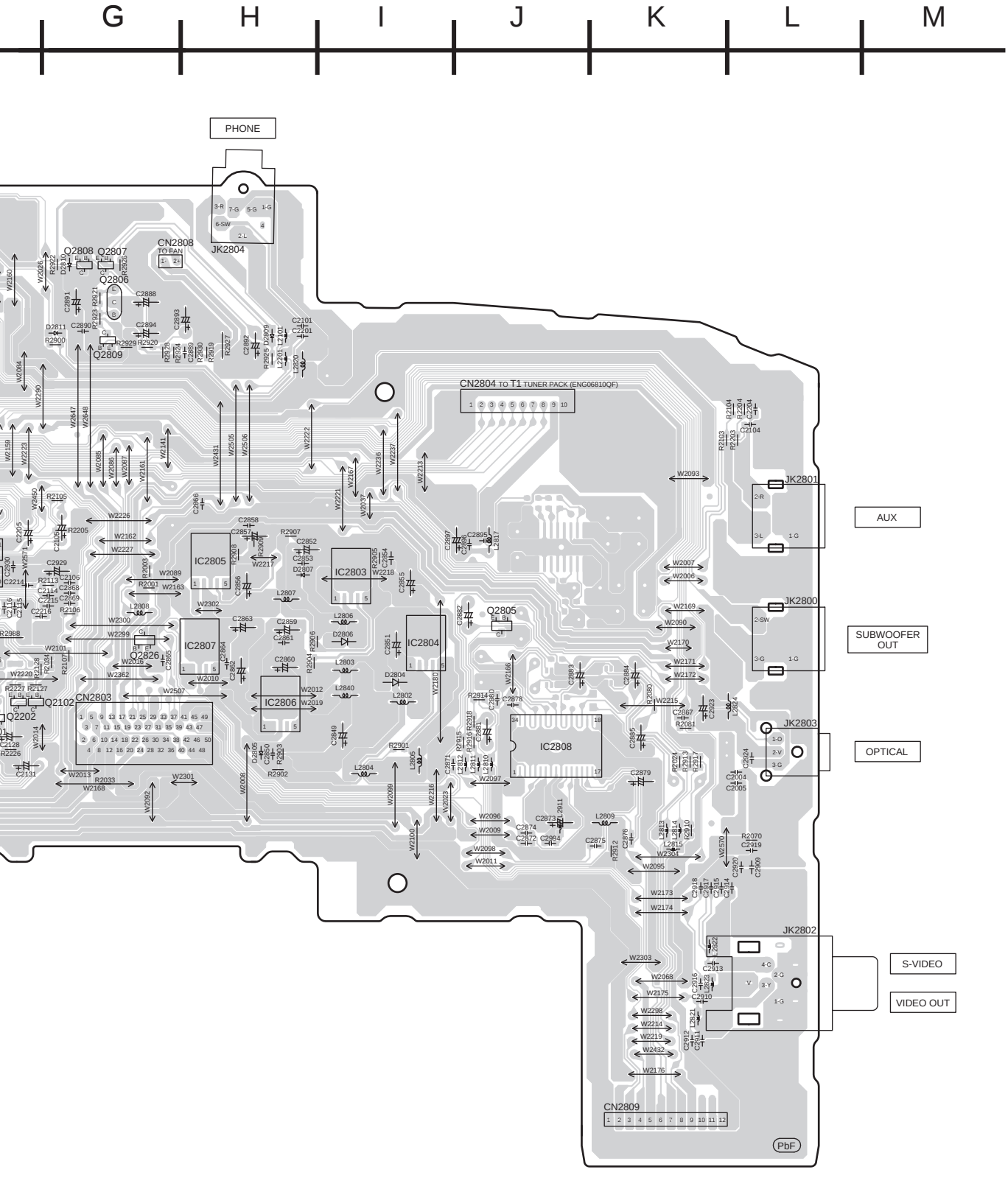
G
H
I
J
K
L
M
PHONE
JK2804
CN2808
TO FAN
Q2808
Q2807
Q2806
Q2809
CN2804 TO T1 TUNER PACK (ENG06810QF)
JK2801
AUX
JK2800
SUBWOOFER OUT
JK2803
OPTICAL
JK2802
S-VIDEO
VIDEO OUT
IC2805
IC2803
IC2807
IC2804
IC2806
IC2808
Q2805
Q2826
Q2102
Q2202
CN2803
CN2809
PbF

C PANEL P.C.B (REPV0053A)

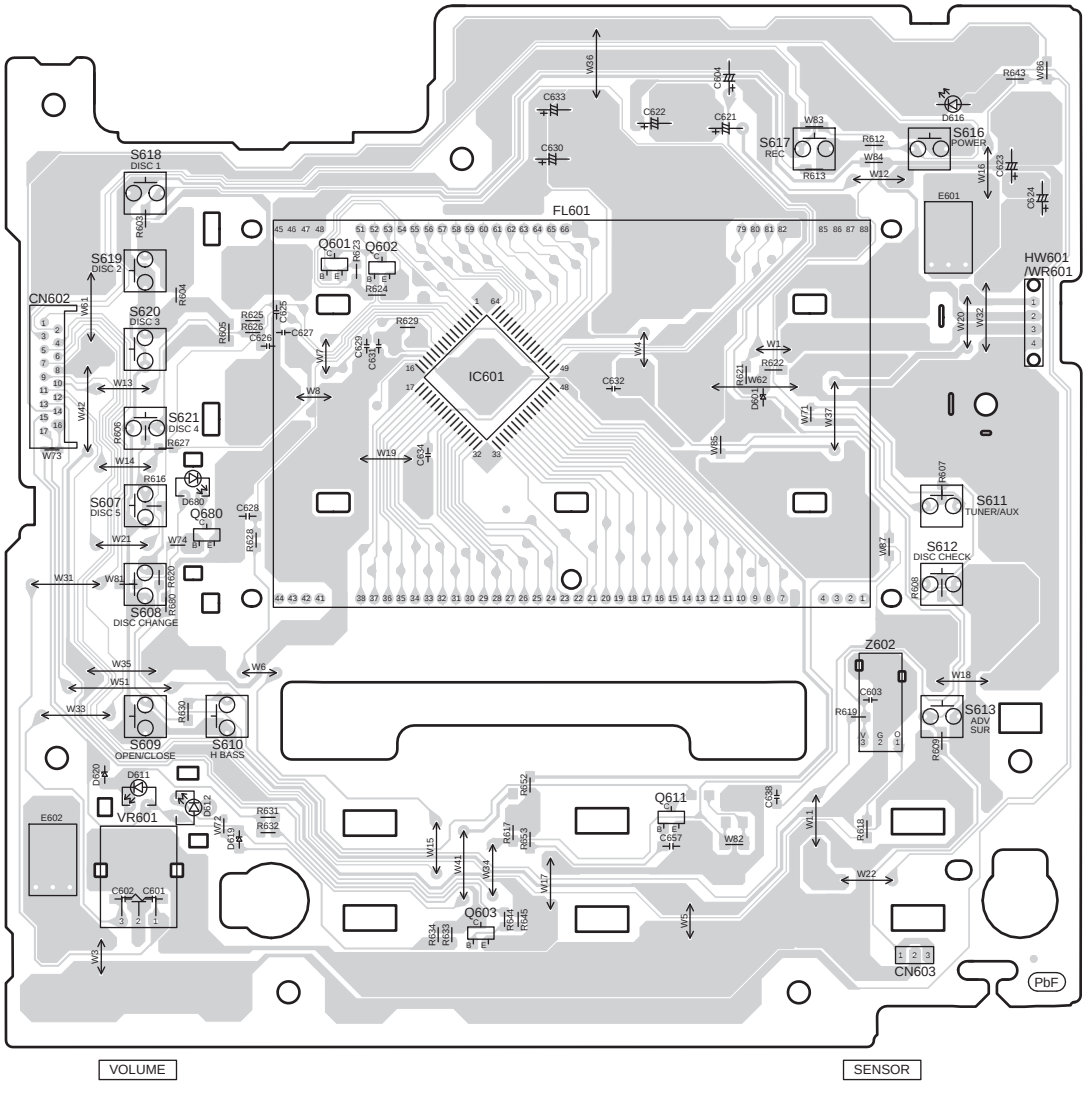

E POWER P.C.B (REPV0052F)

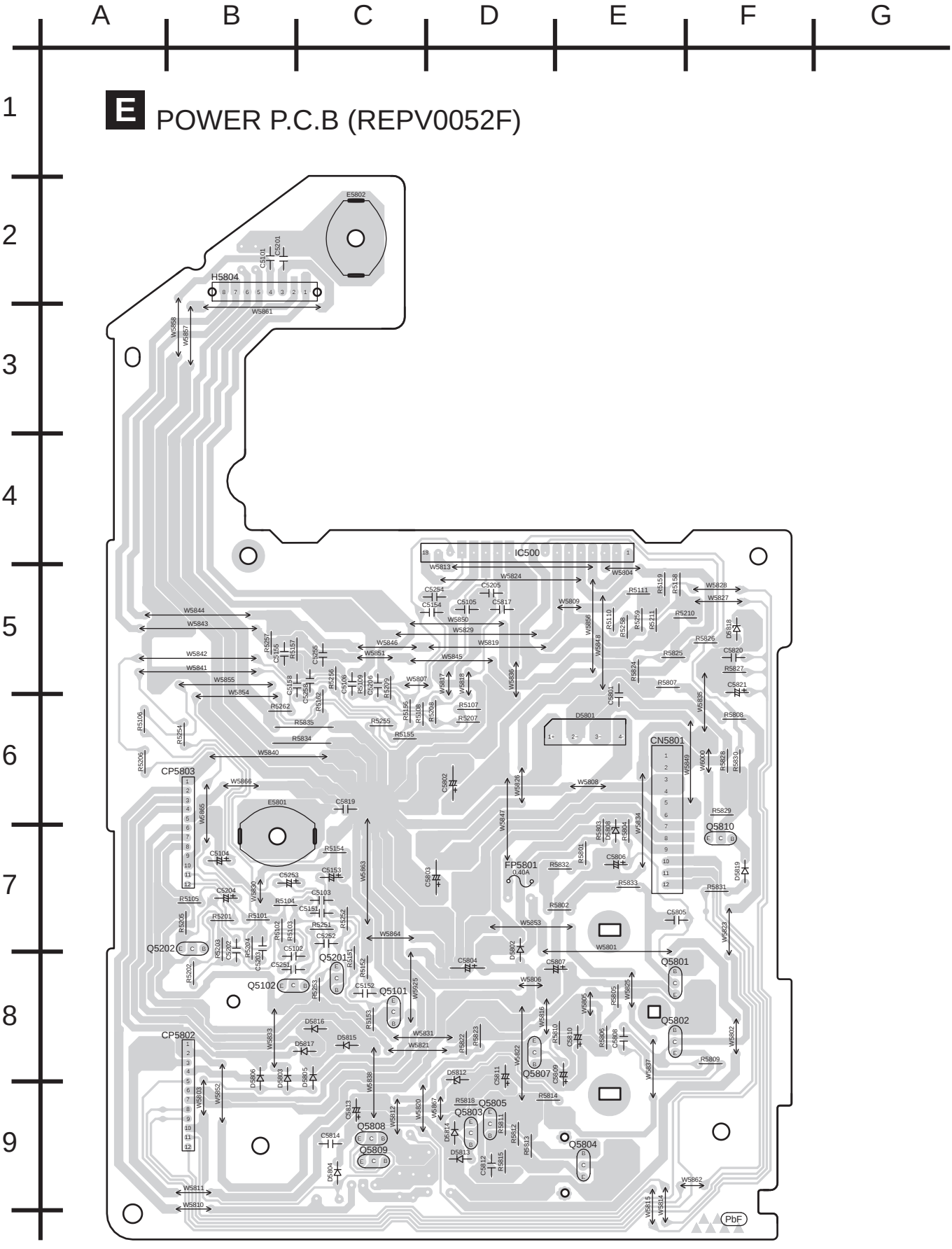

L SWITCH P.C.B (REPV0064A)

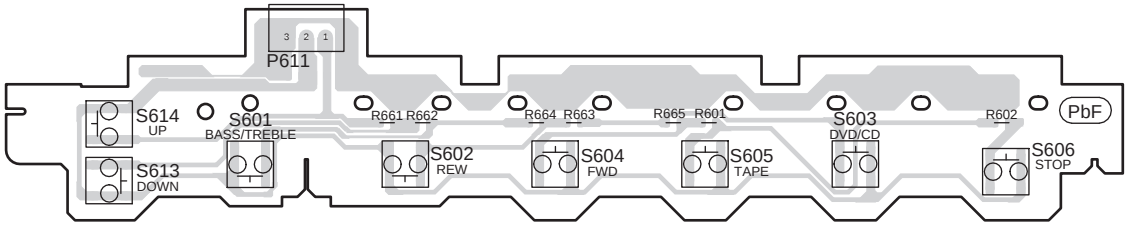

M SPEAKER P.C.B (REPV0052F)

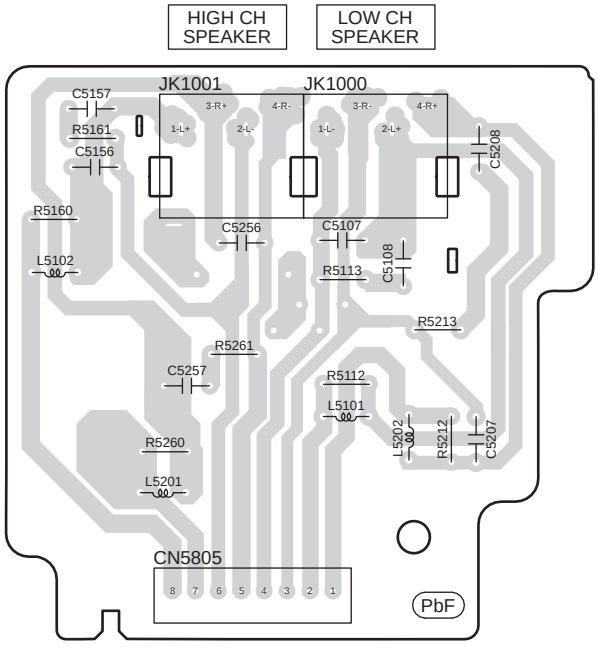

D TRANSFORMER P.C.B (REPV0052F)

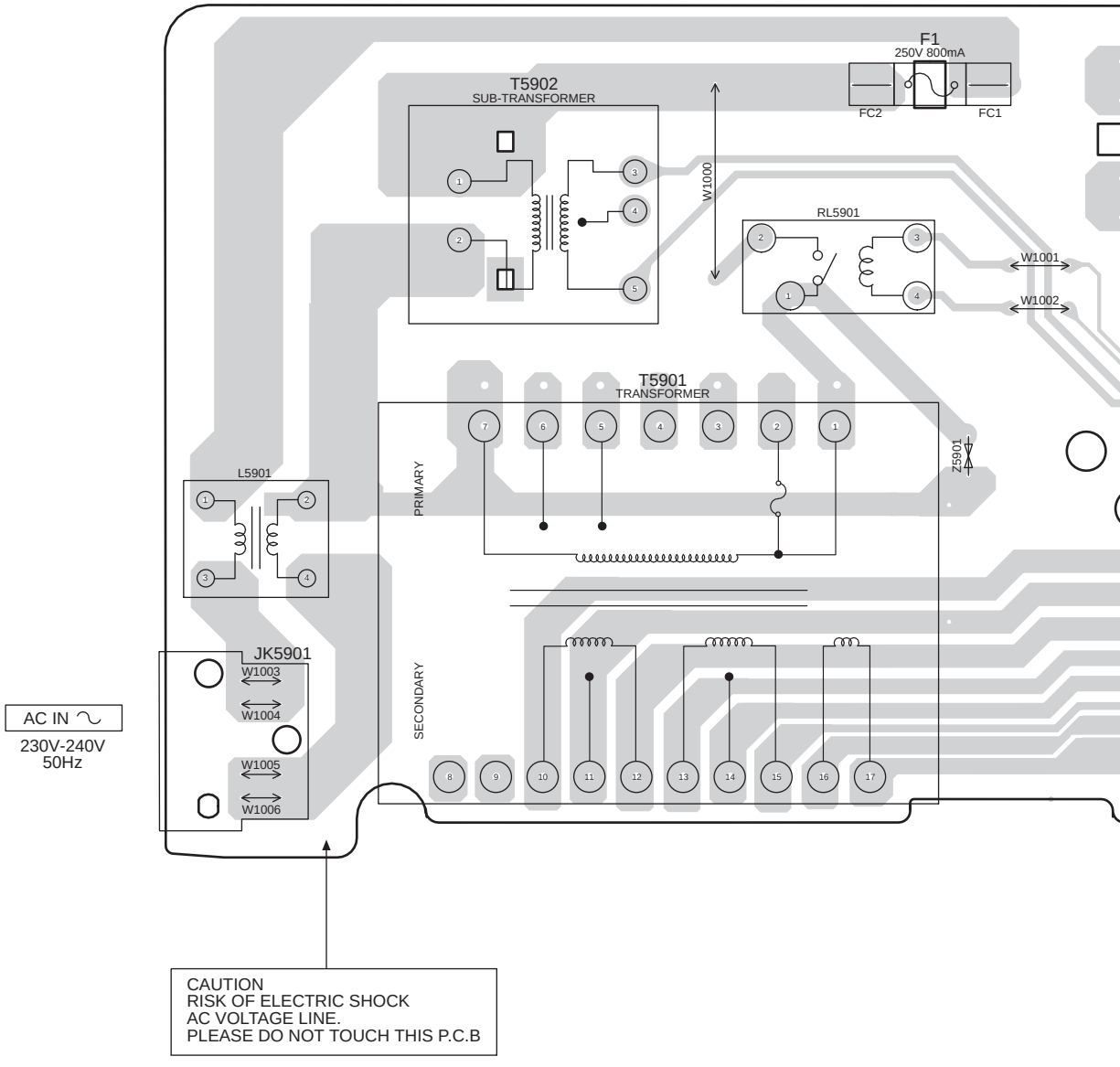

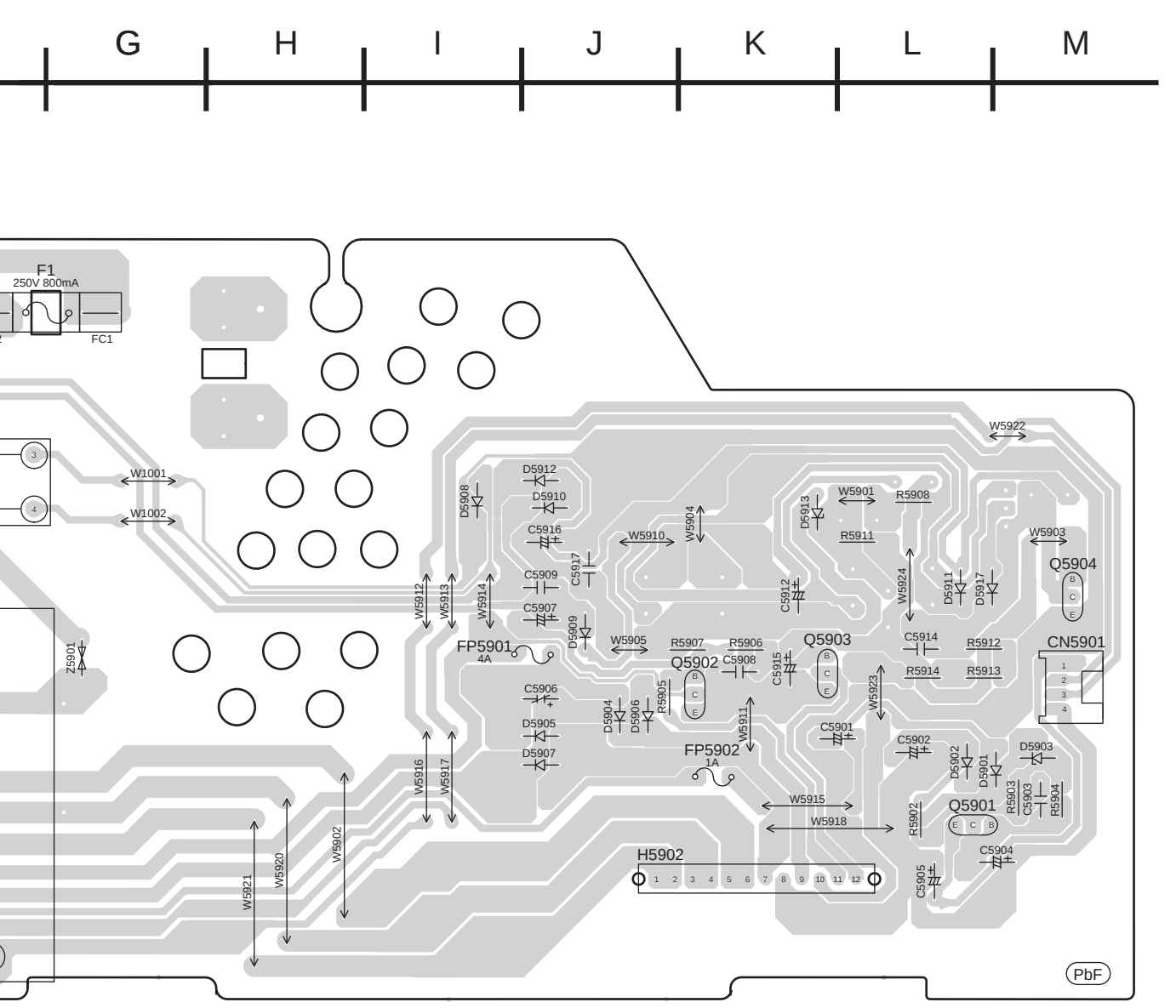
G
H
I
J
K
L
M
F1
250V 800mA
FC1
W1001
W1002
Z5901
D5908
D5912
D5910
C5916
C5909
C5907
C5917
D5909
W5910
W5904
W5912
W5913
W5914
FP5901
4A
W5905
R5907
R5906
Q5902
C5908
C5906
D5905
D5907
D5904
D5906
R5905
W5911
FP5902
1A
W5916
W5917
W5921
W5920
W5902
H5902
1 2 3 4 5 6 7 8 9 10 11 12
D5913
W5901
R5908
R5911
C5912
W5924
W5922
W5903
Q5904
D5911
D5917
C5914
R5912
R5914
R5913
Q5903
C5915
W5923
C5901
C5902
D5902
D5901
D5903
R5903
C5903
R5904
Q5901
R5902
C5904
C5905
W5915
W5918
CN5901
PbF

SCHEMATIC DIAGRAM - 1

OPTICAL PICKUP UNIT CIRCUIT

: +B SIGNAL LINE

: CD-DA SIGNAL LINE

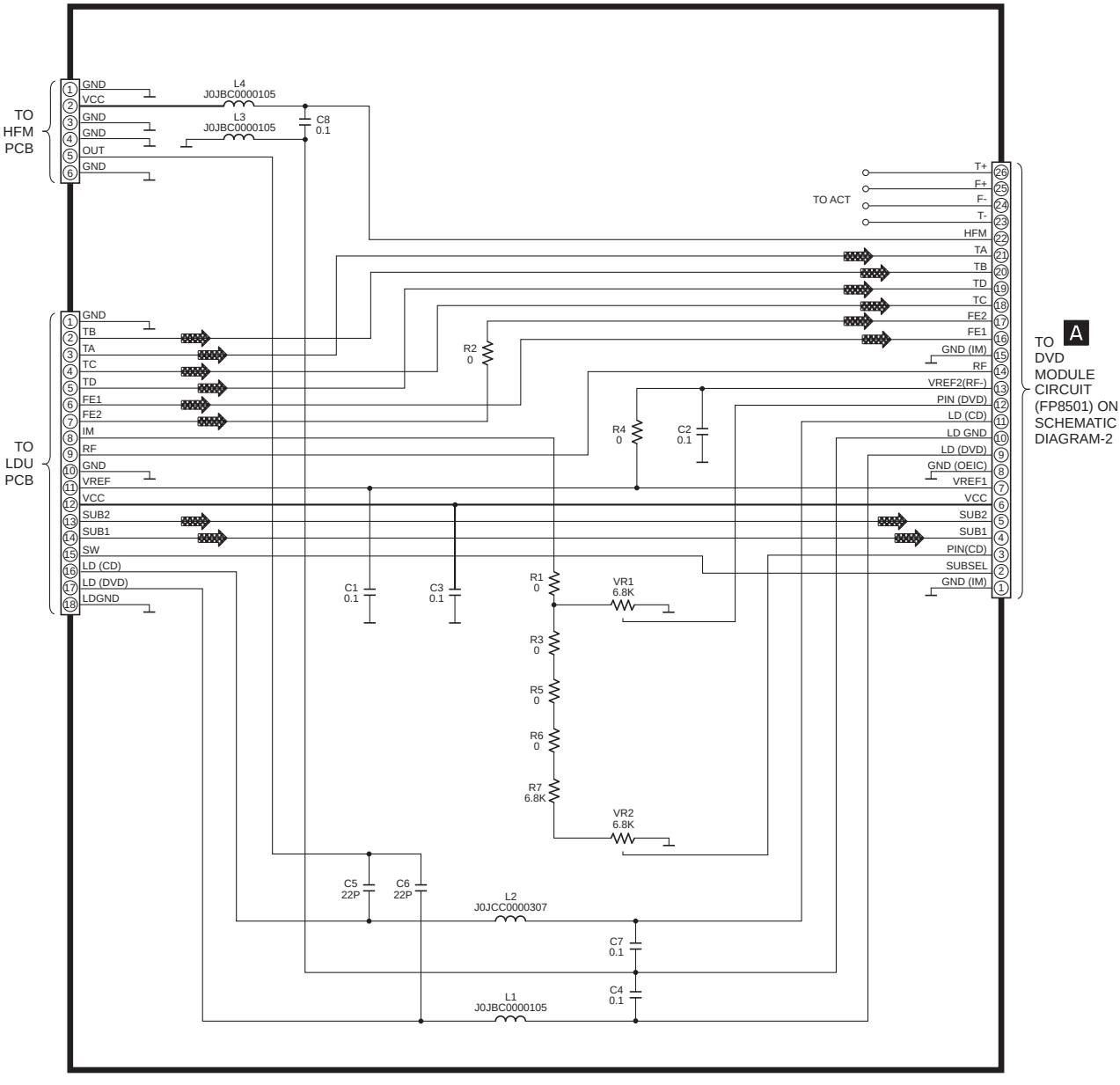

SCHEMATIC DIAGRAM - 2

A SIDE A SIDE B

DVD MODULE CIRCUIT

: +B SIGNAL LINE : CD-DA SIGNAL LINE

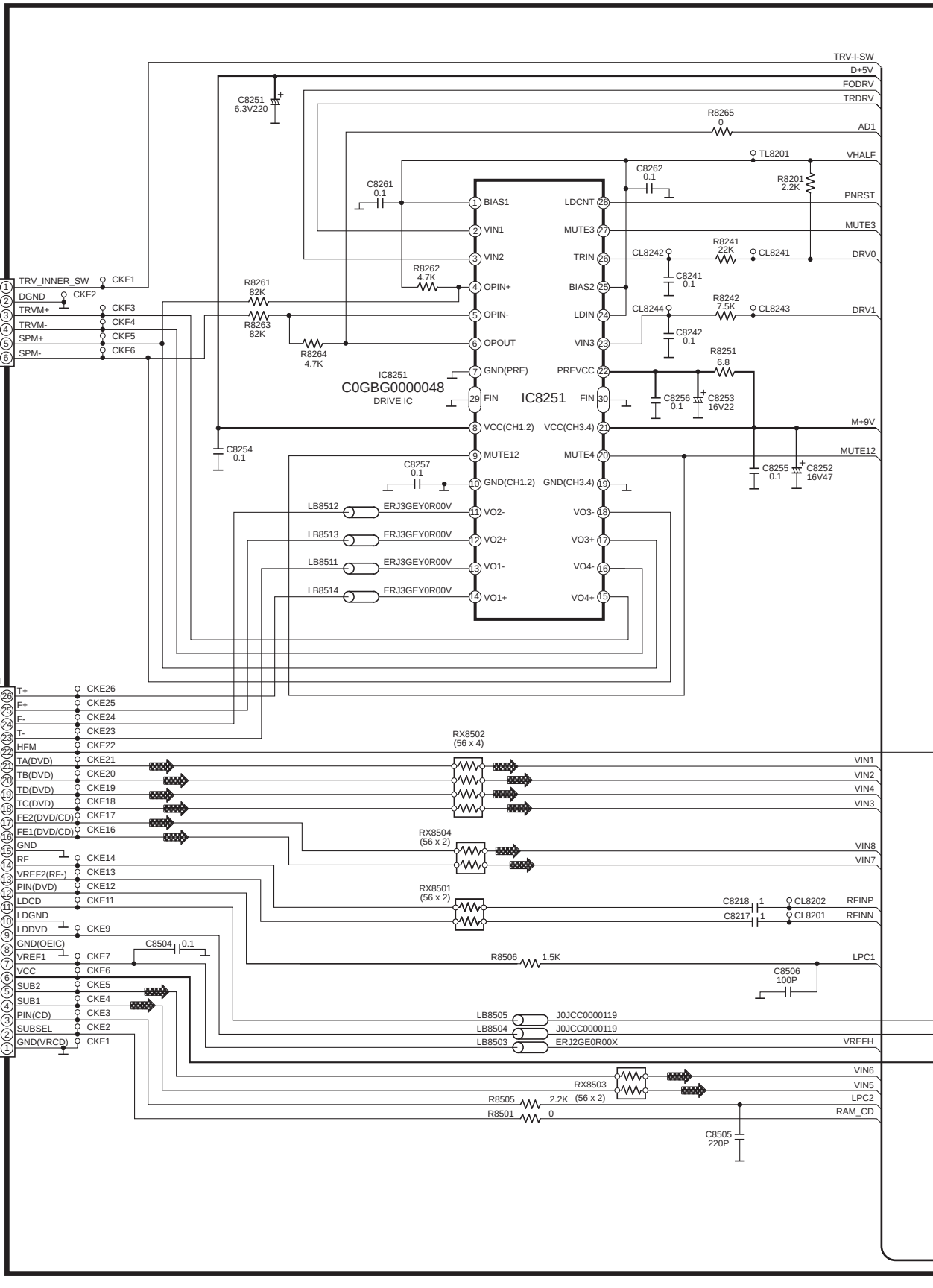

A DVD MODULE CIRCUIT

: +B SIGNAL LINE

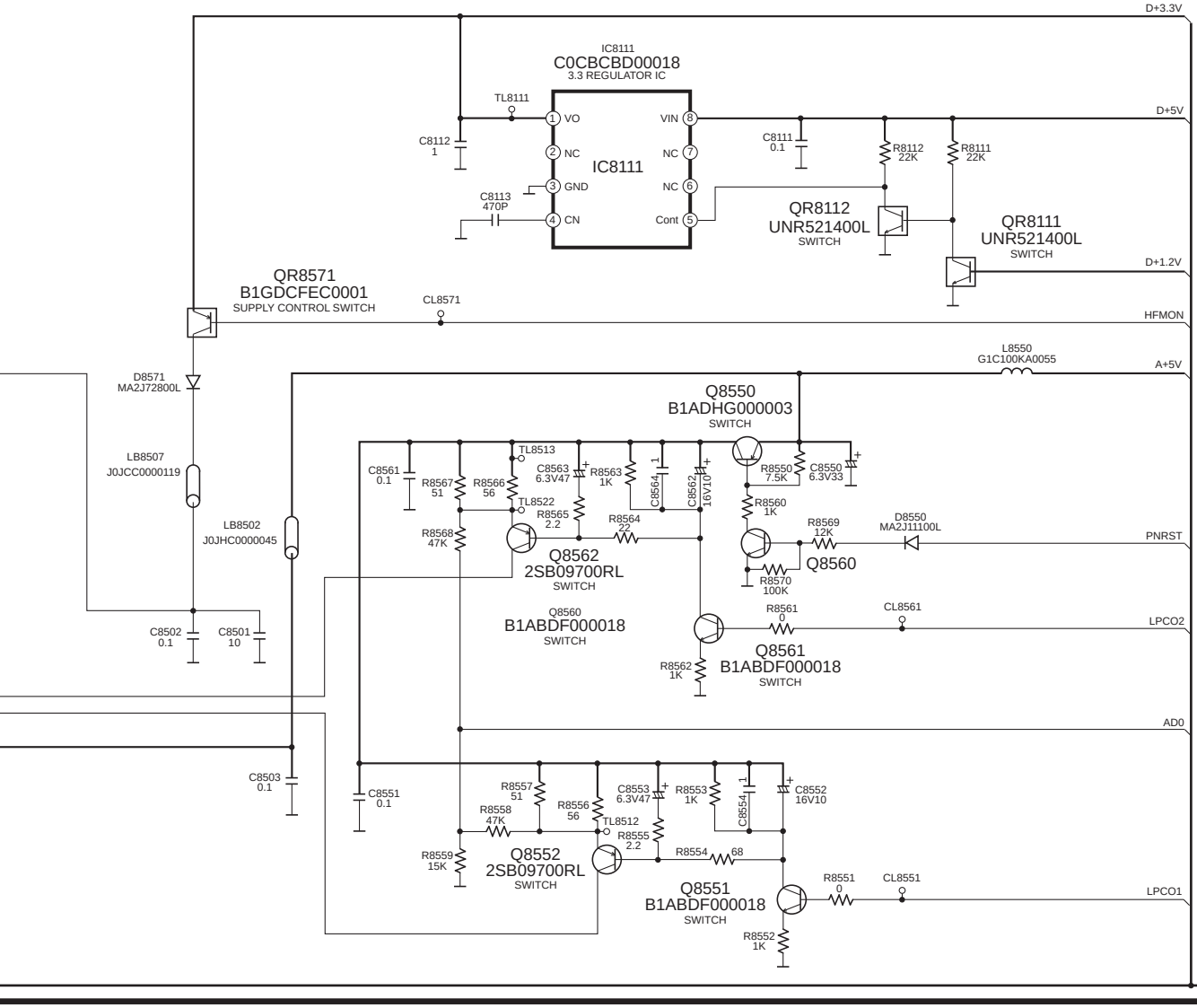

A DVD MODULE CIRCUIT

: MAIN SIGNAL LINE
: DVD VIDEO SIGNAL LINE
: +B SIGNAL LINE

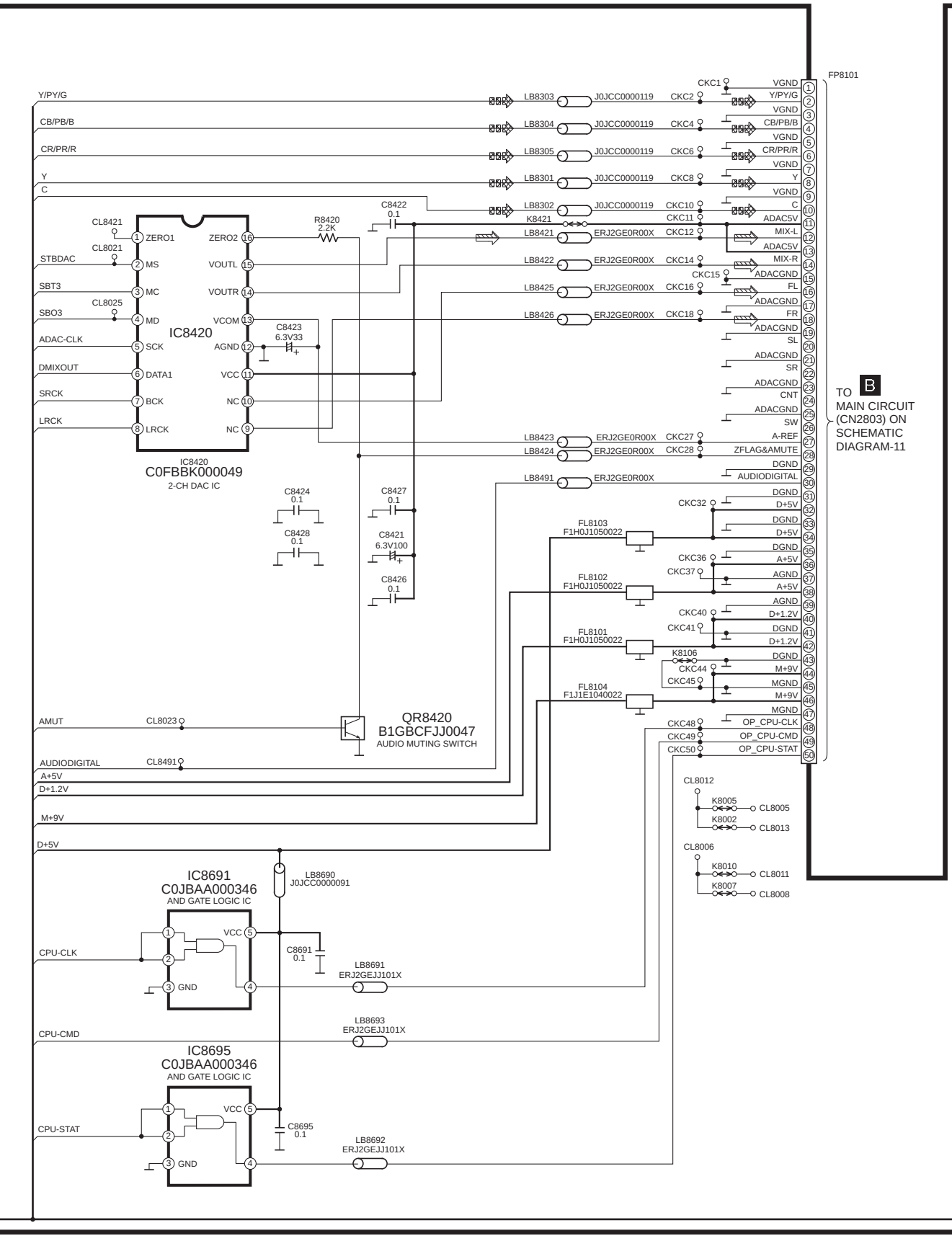

A DVD MODULE CIRCUIT

: +B SIGNAL LINE

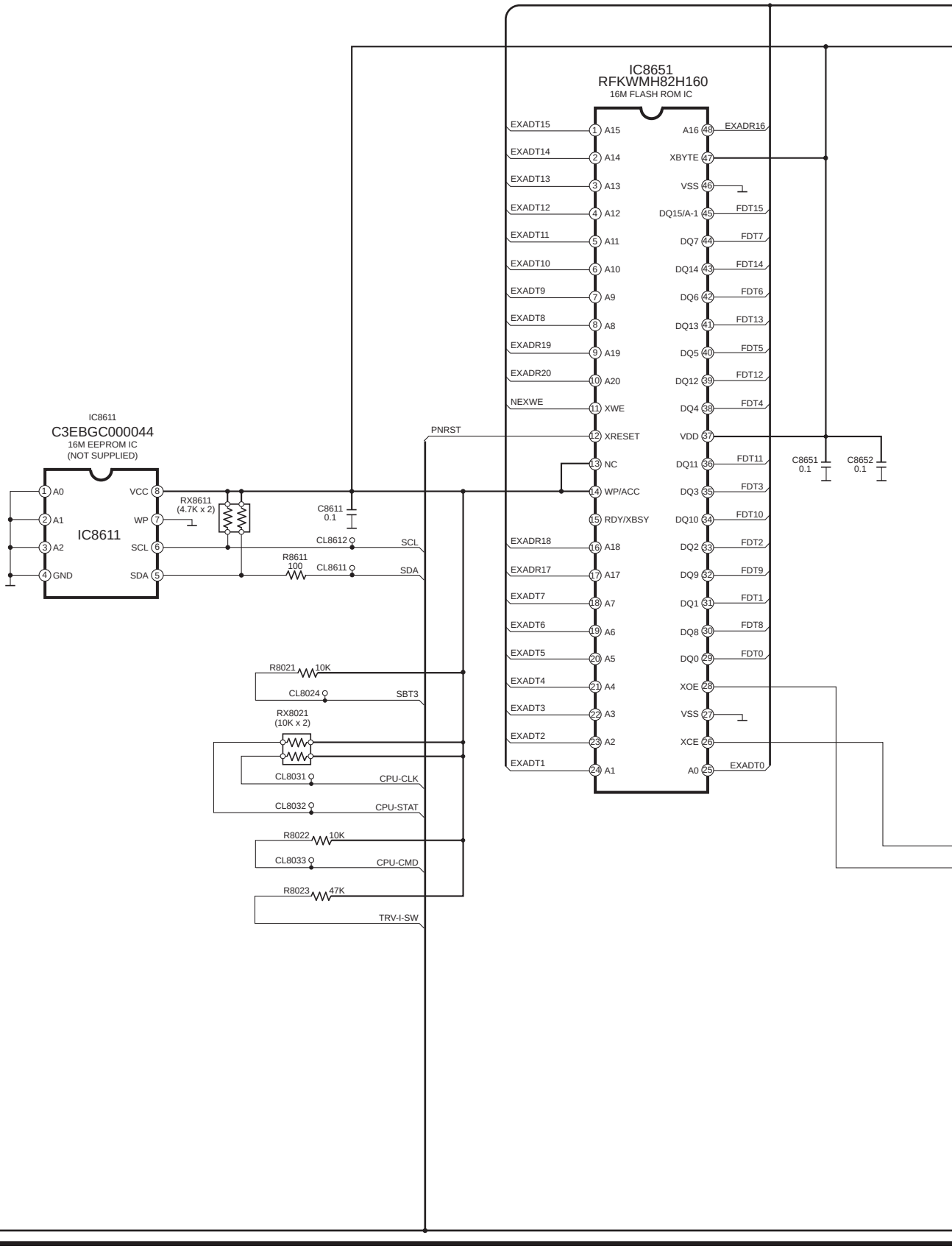

A DVD MODULE CIRCUIT

: +B SIGNAL LINE

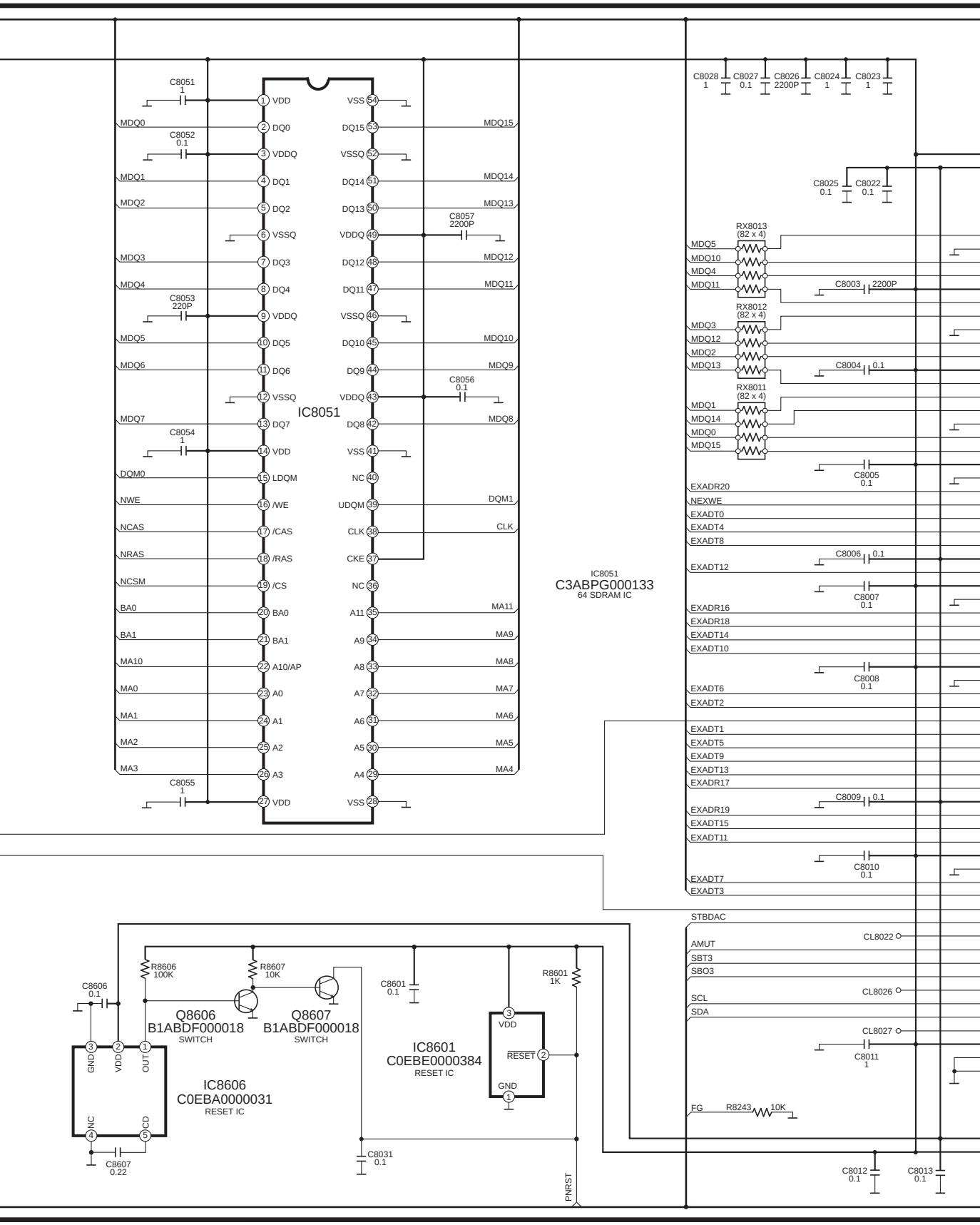

SCHEMATIC DIAGRAM - 7

A DVD MODULE CIRCUIT

: +B SIGNAL LINE

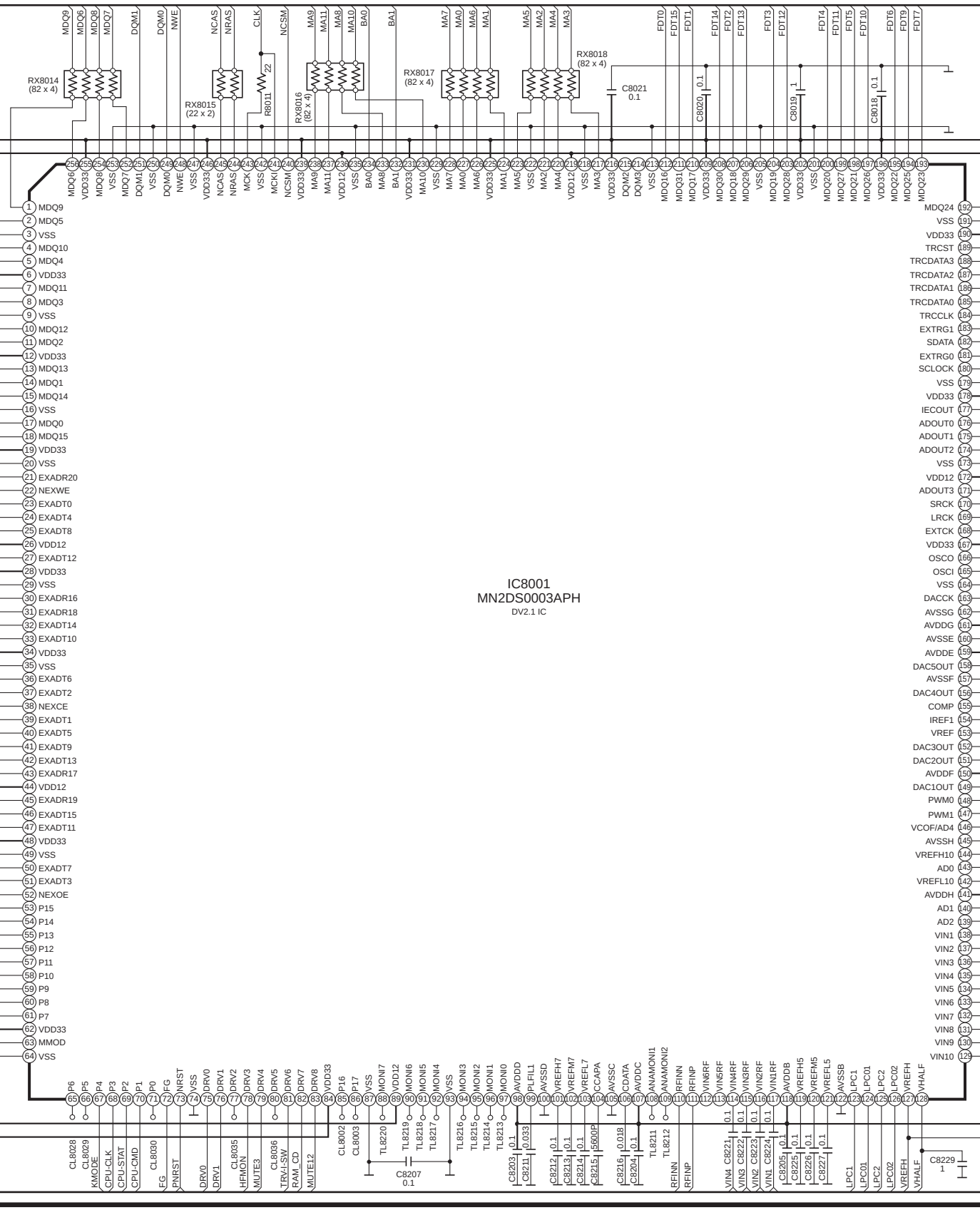

A DVD MODULE CIRCUIT

: CD-DA SIGNAL LINE
: +B SIGNAL LINE
: DVD VIDEO SIGNAL LINE
: DVD AUDIO SIGNAL LINE

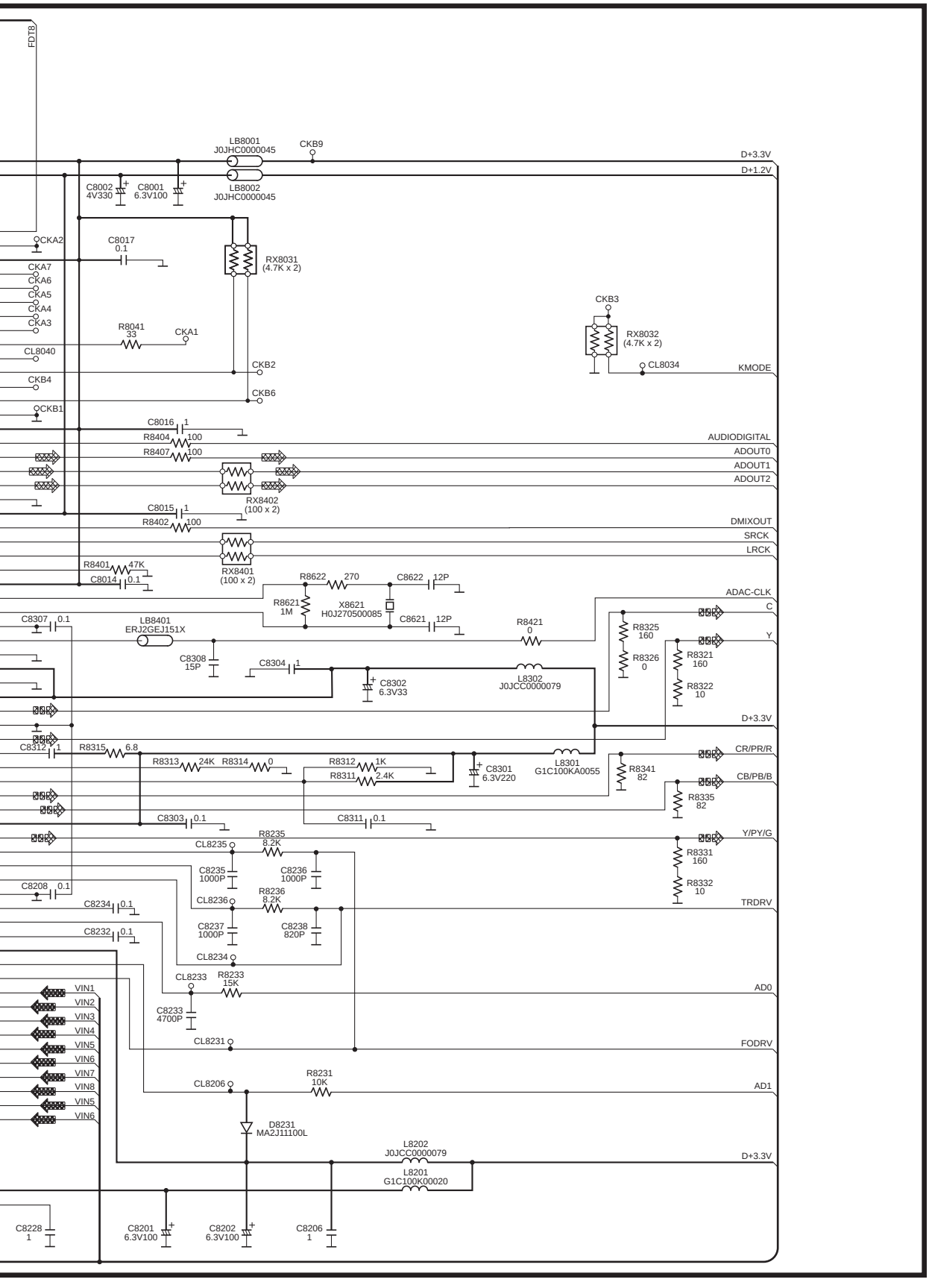

SCHEMATIC DIAGRAM-9

B MAIN CIRCUIT

: +B SIGNAL LINE

: DVD (VIDEO) SIGNAL LINE
: AUX SIGNAL LINE
: FM/AM SIGNAL LINE

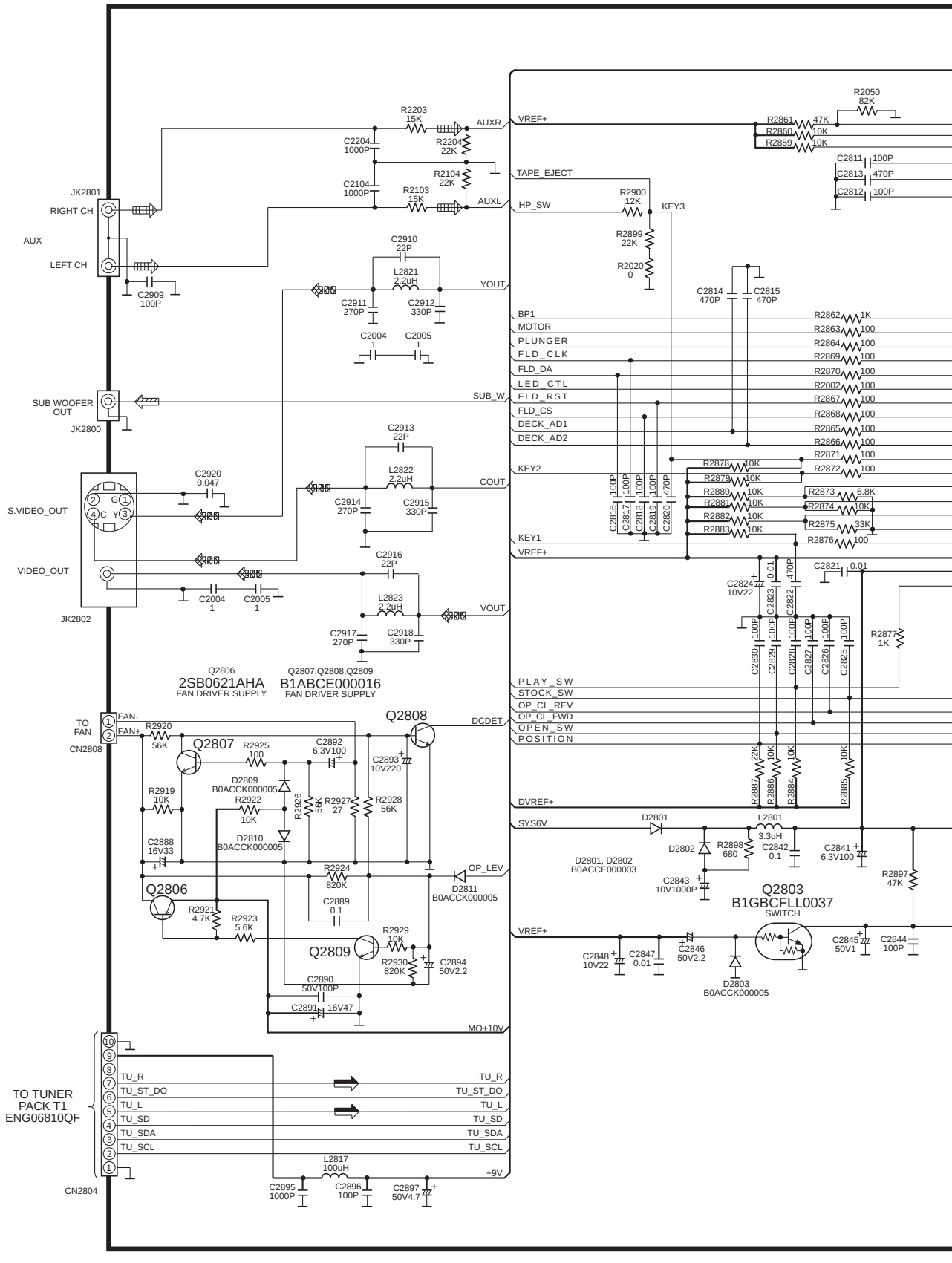

SCHEMATIC DIAGRAM-10

B MAIN CIRCUIT

: +B SIGNAL LINE : DVD (VIDEO) SIGNAL LINE

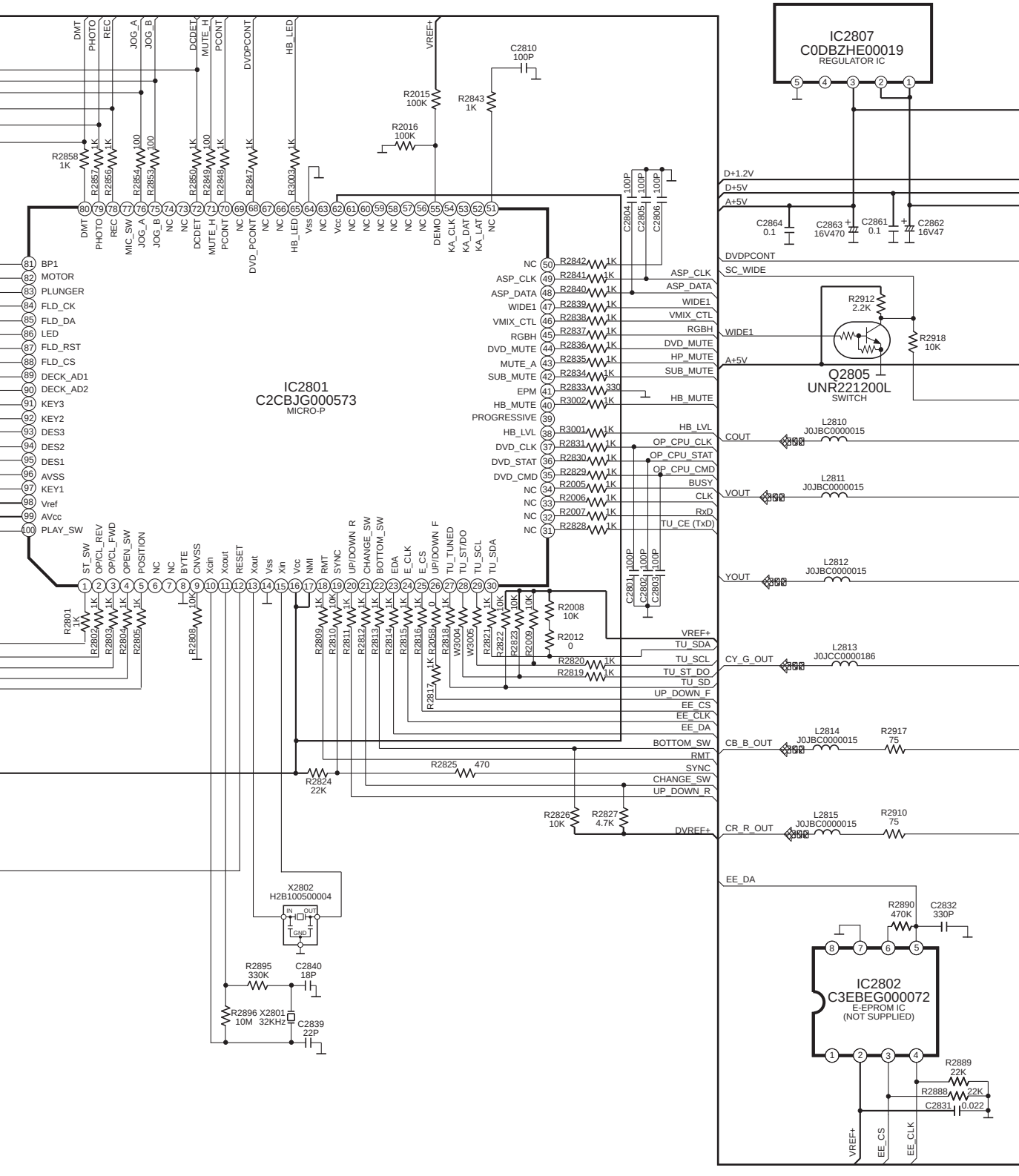

SCHEMATIC DIAGRAM-11

B MAIN CIRCUIT

- - - - : - B SIGNAL LINE
——— : +B SIGNAL LINE
: DVD (VIDEO) SIGNAL LINE
: MAIN SIGNAL LINE

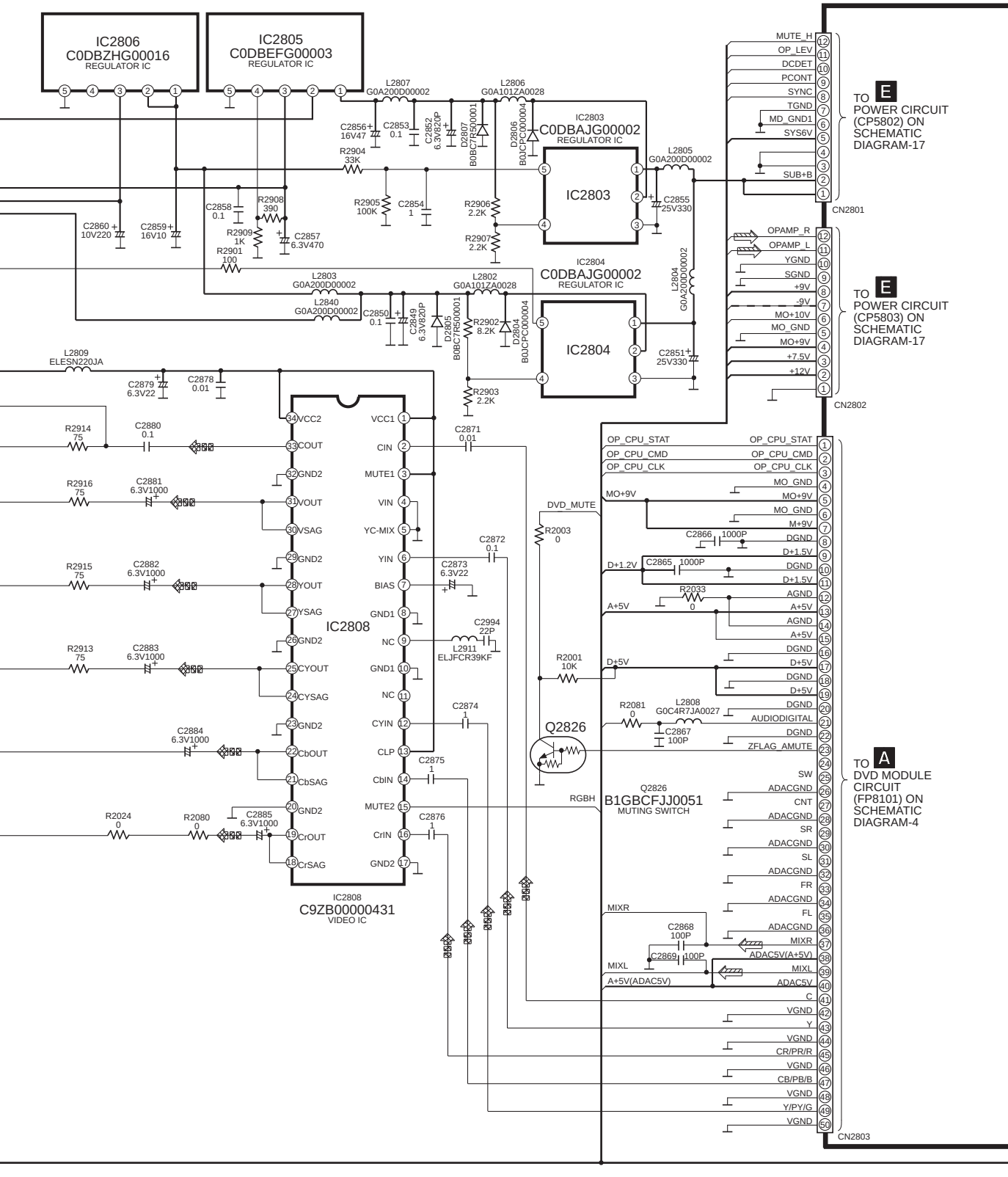

SCHEMATIC DIAGRAM-12

B MAIN CIRCUIT

: MAIN SIGNAL LINE
: - B SIGNAL LINE
: +B SIGNAL LINE
: TAPE PLAYBACK SIGNAL LINE
: TAPE RECORD SIGNAL LINE
: FM/AM SIGNAL LINE
: AUX SIGNAL LINE

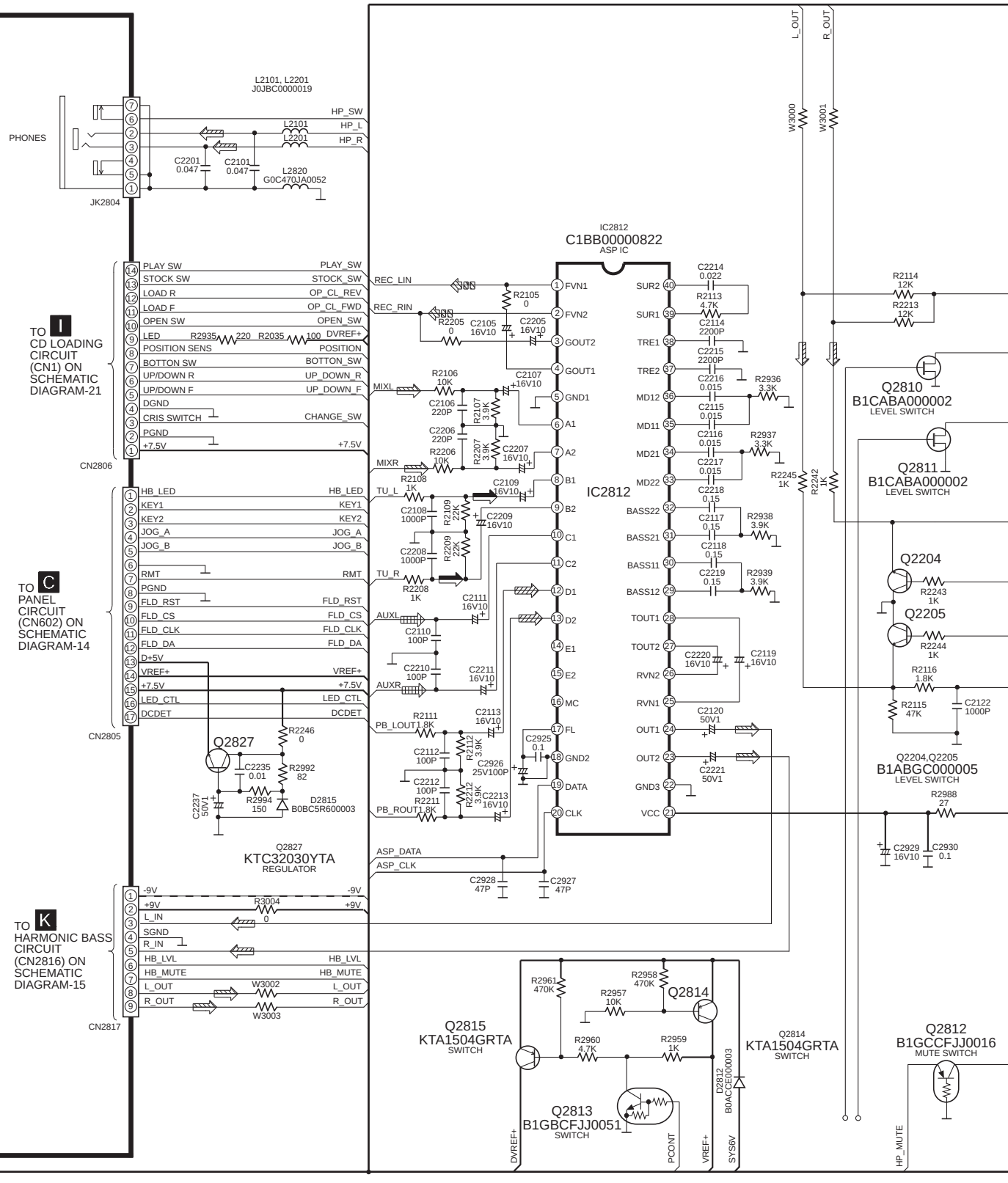

SCHEMATIC DIAGRAM-13

B MAIN CIRCUIT

: MAIN SIGNAL LINE
: - B SIGNAL LINE
: +B SIGNAL LINE
: TAPE PLAYBACK SIGNAL LINE
: TAPE RECORD SIGNAL LINE
: DVD (AUDIO) SIGNAL LINE
: DVD (VIDEO) SIGNAL LINE

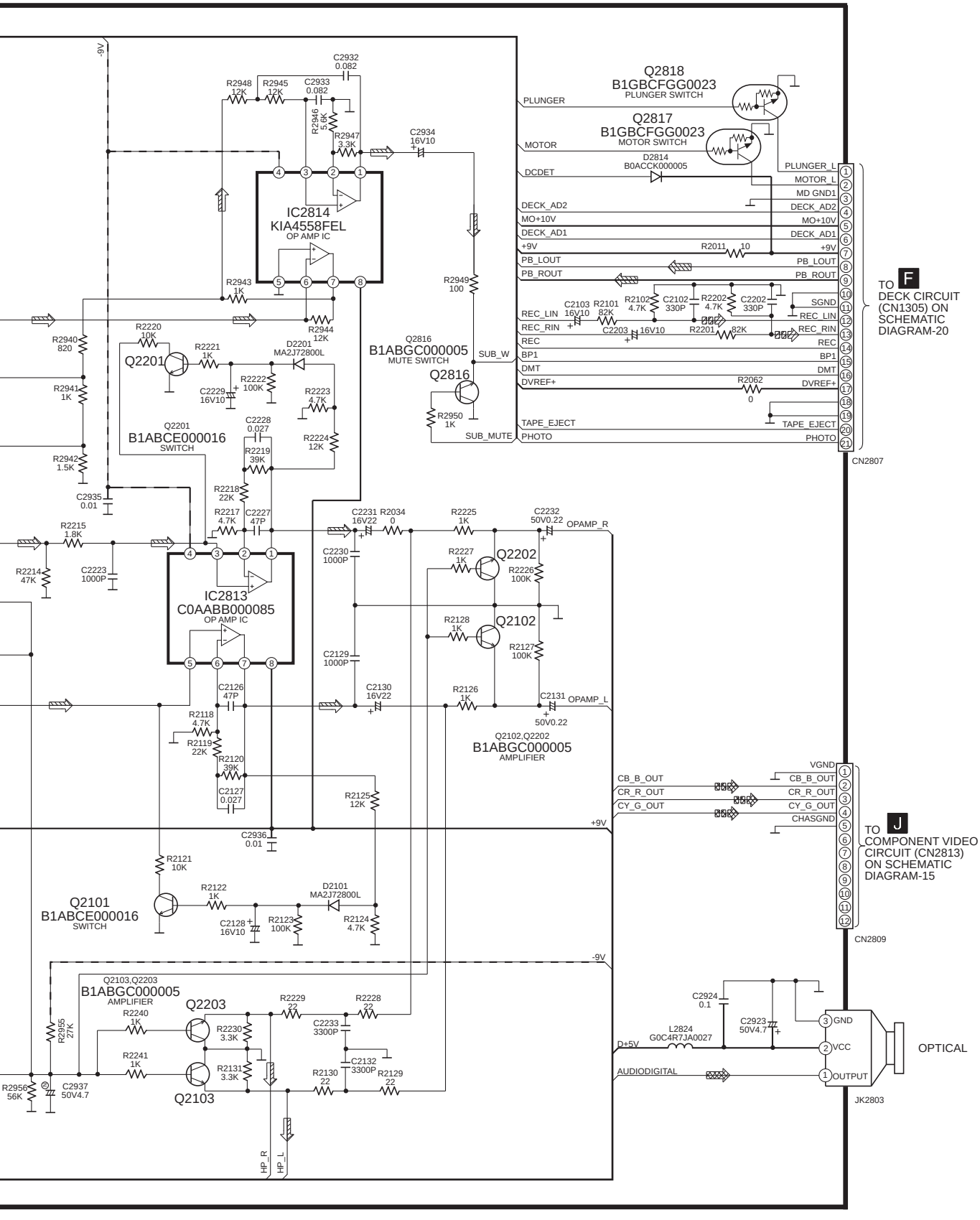

SCHEMATIC DIAGRAM - 14

C PANEL CIRCUIT

- - - : -B SIGNAL LINE

——— : +B SIGNAL LINE

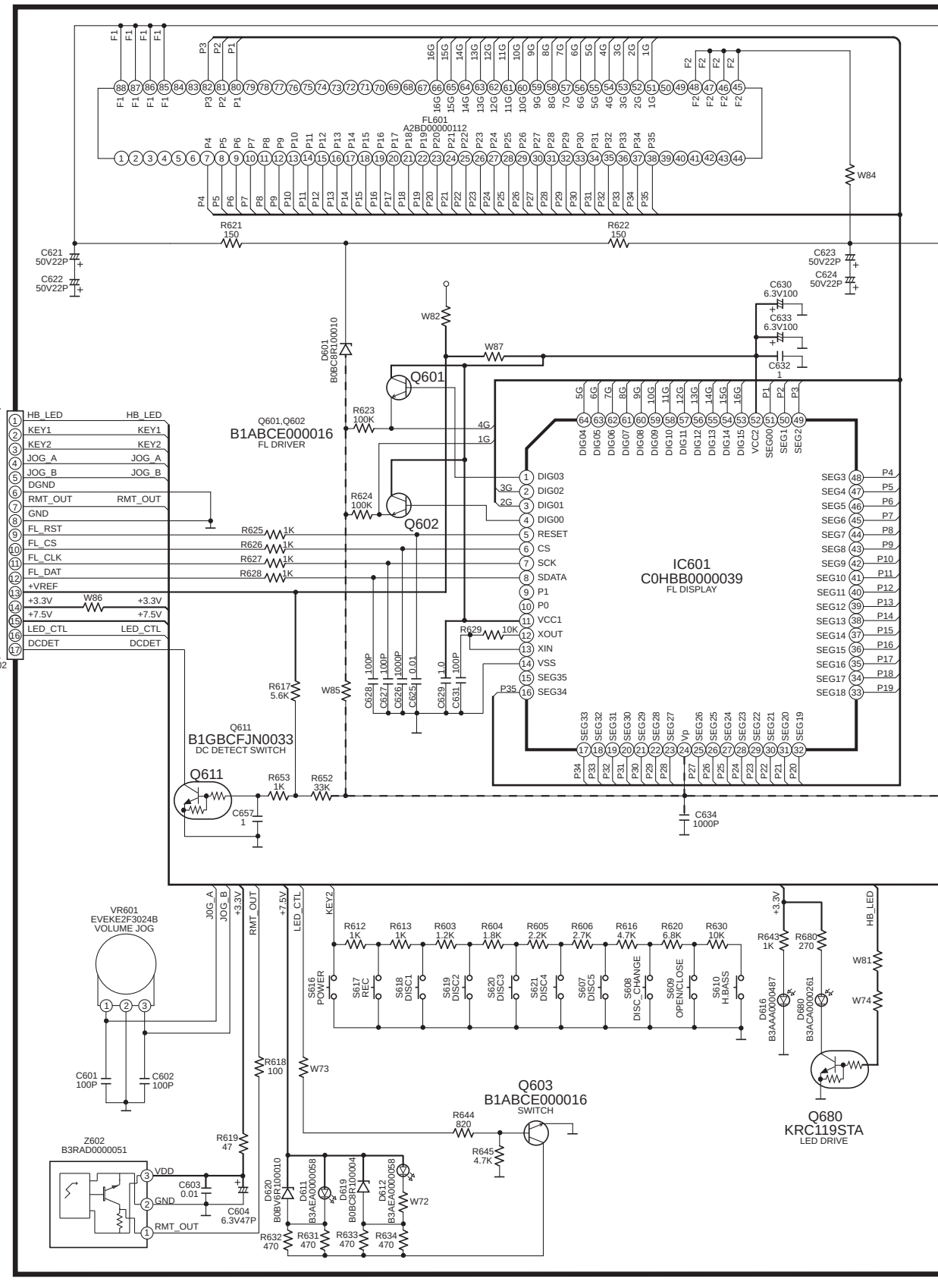

SCHEMATIC DIAGRAM - 15

: +B SIGNAL LINE
: -B SIGNAL LINE
: MAIN SIGNAL LINE
: DVD (VIDEO) SIGNAL LINE

C PANEL CIRCUIT

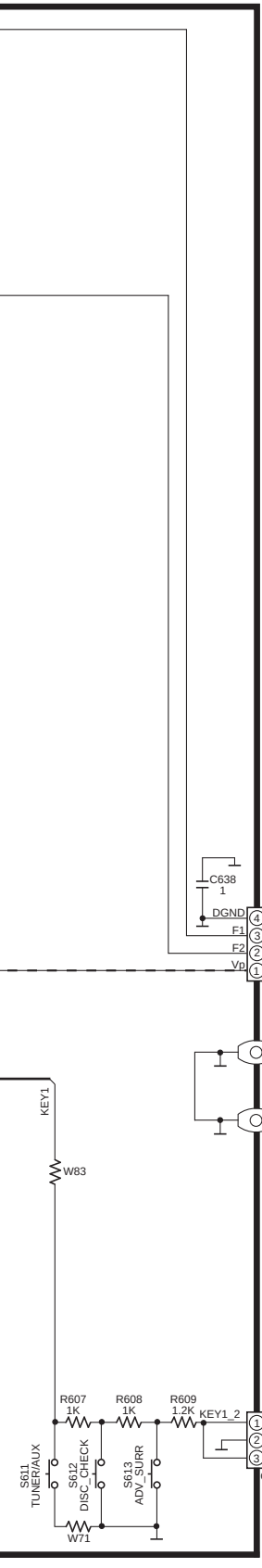

K HARMONIC BASS CIRCUIT

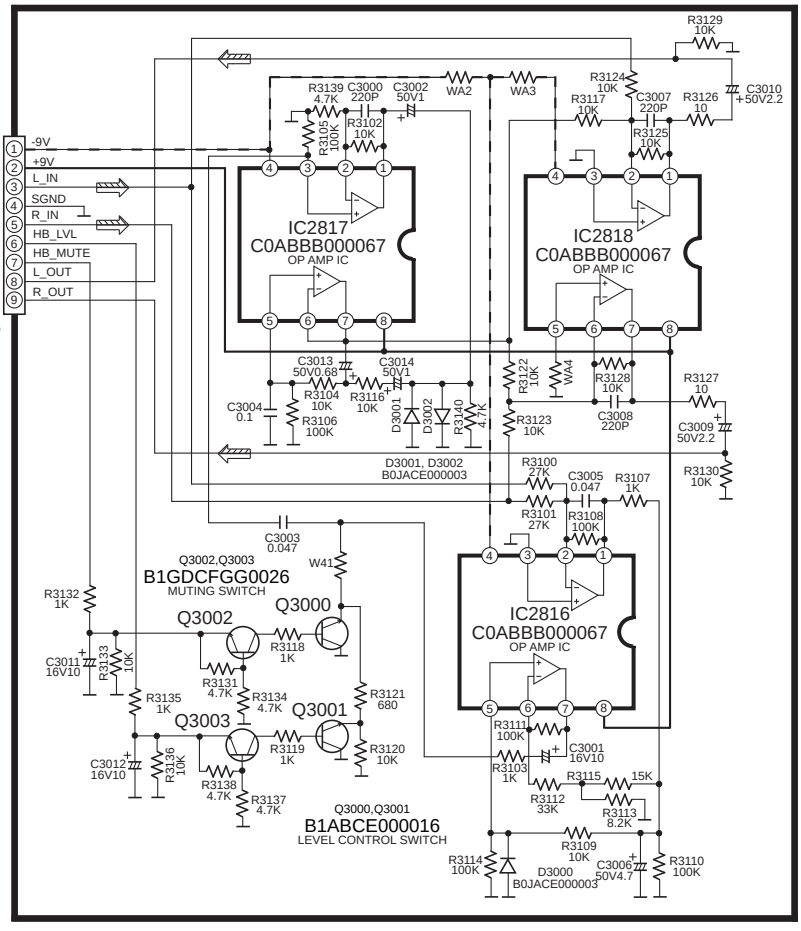

J COMPONENT VIDEO CIRCUIT

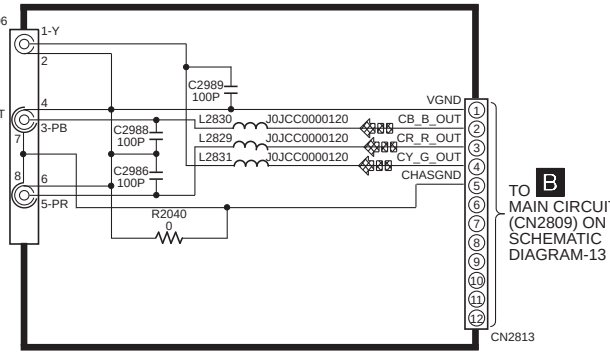

L SWITCH CIRCUIT

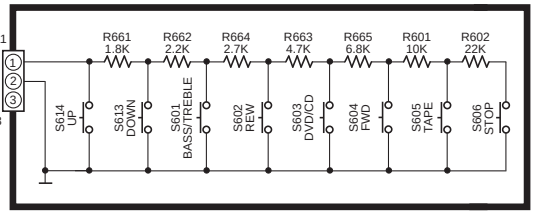

SCHEMATIC DIAGRAM-16

- - - : -B SIGNAL LINE

——— : +B SIGNAL LINE

⇨ : MAIN SIGNAL LINE

D TRANSFORMER CIRCUIT

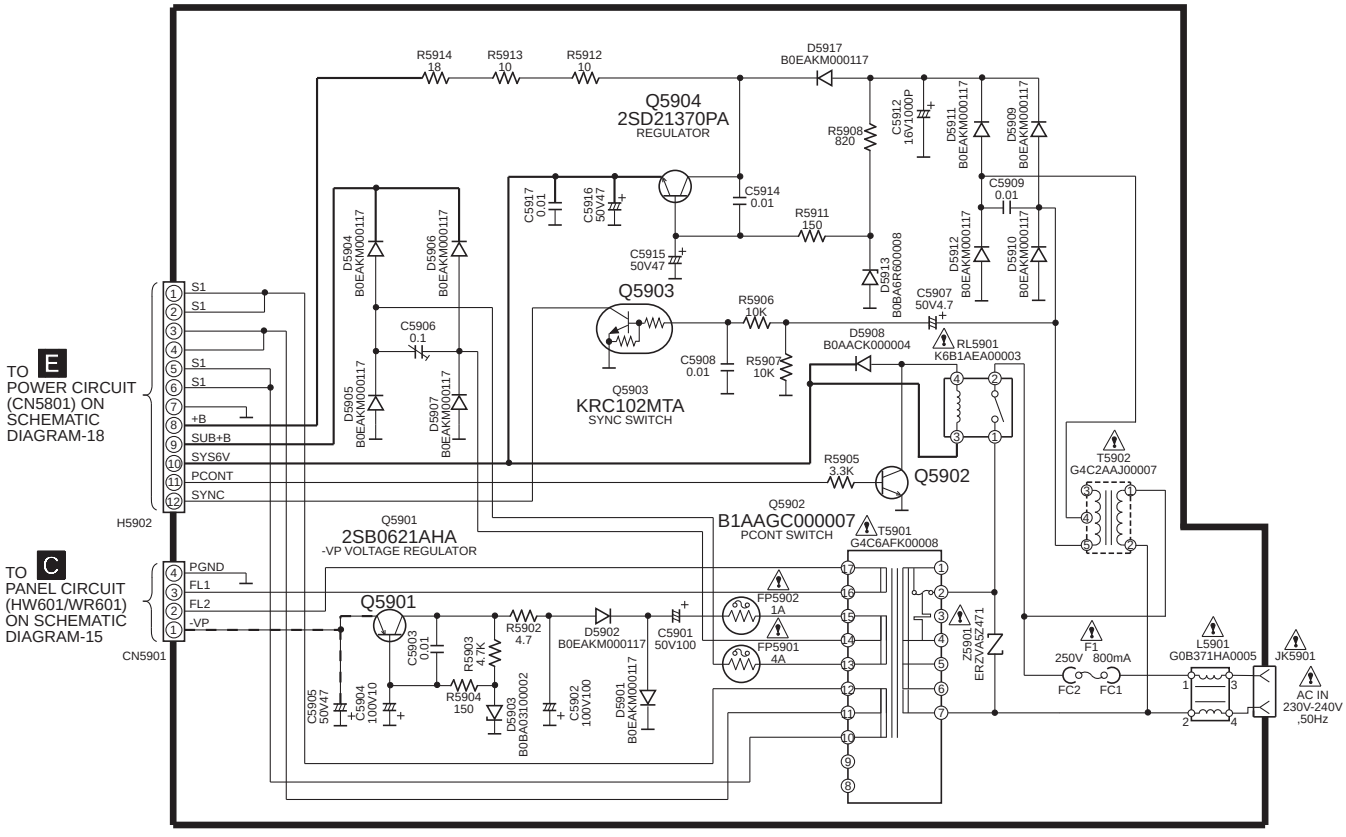

M SPEAKER CIRCUIT

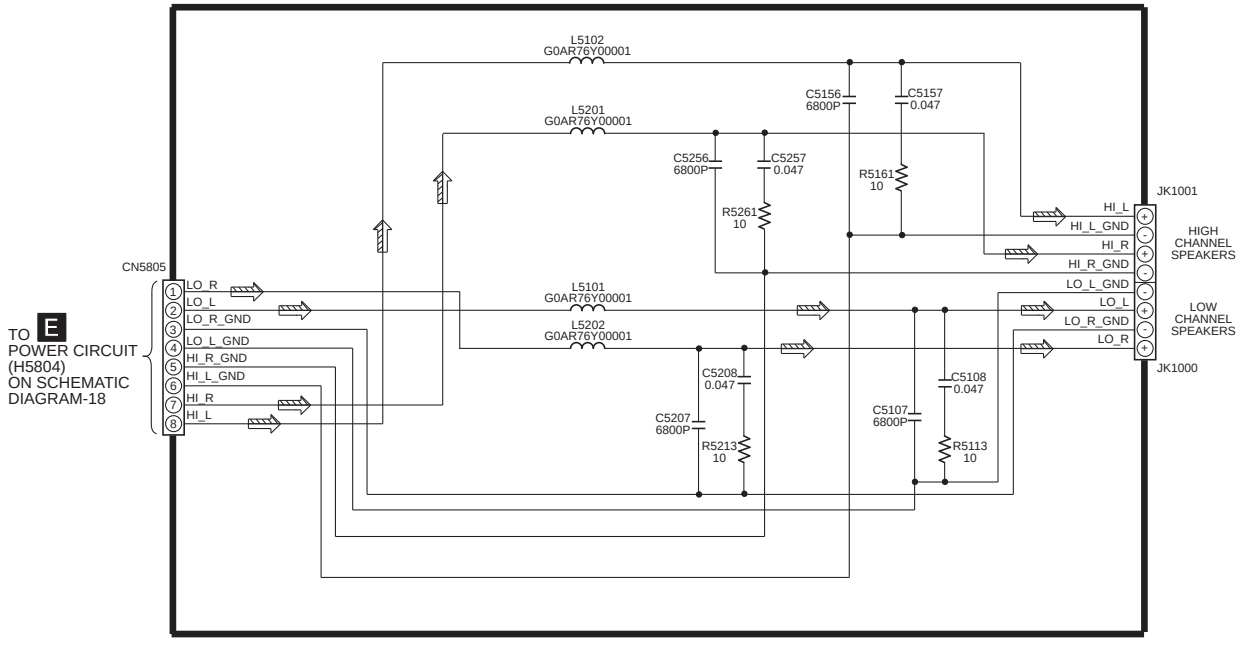

SCHEMATIC DIAGRAM-17

E POWER CIRCUIT

- - - : -B SIGNAL LINE

——— : +B SIGNAL LINE

⇨ : MAIN SIGNAL LINE

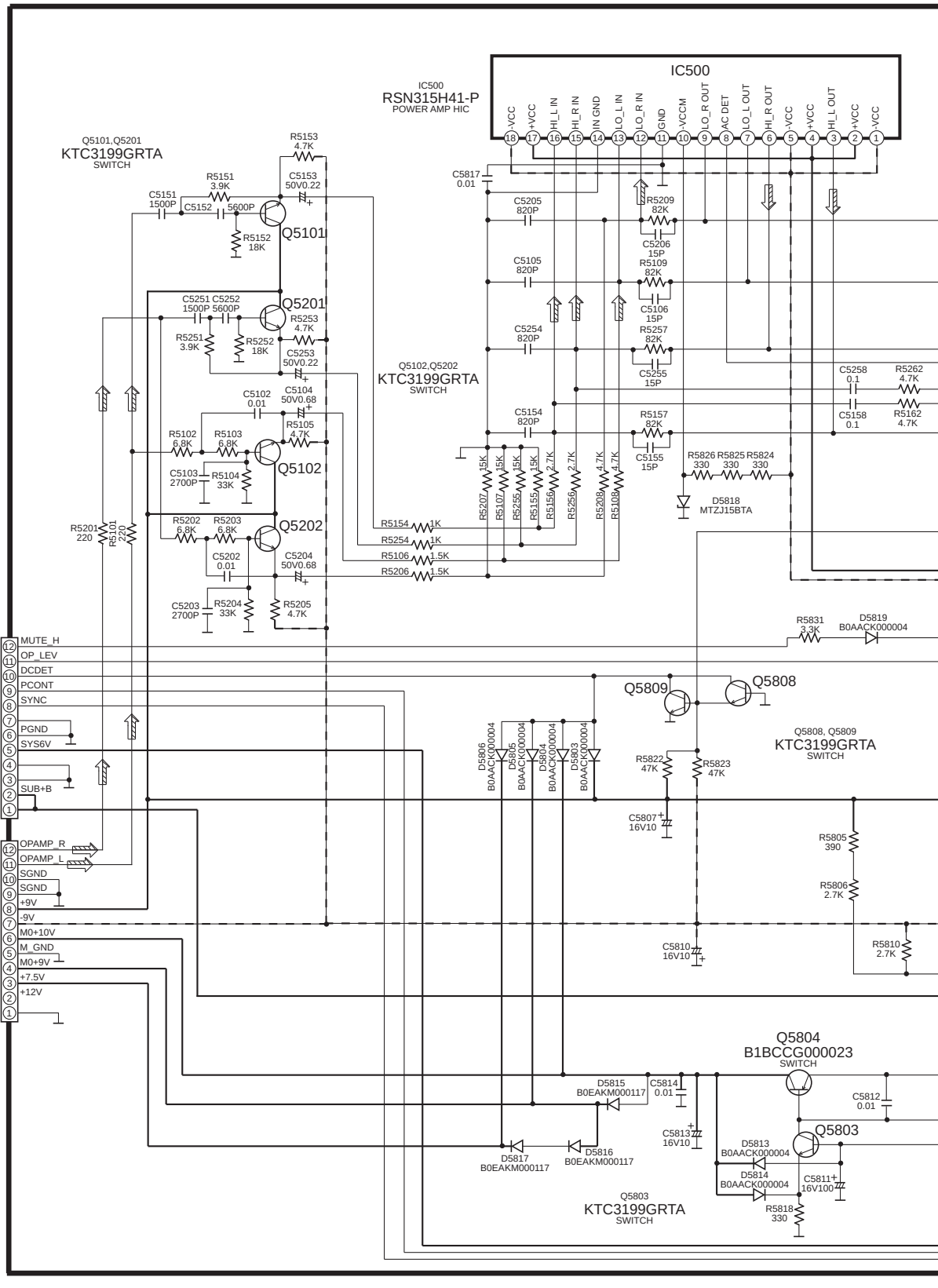

SCHEMATIC DIAGRAM-18

E POWER CIRCUIT

: -B SIGNAL LINE

: +B SIGNAL LINE

: MAIN SIGNAL LINE

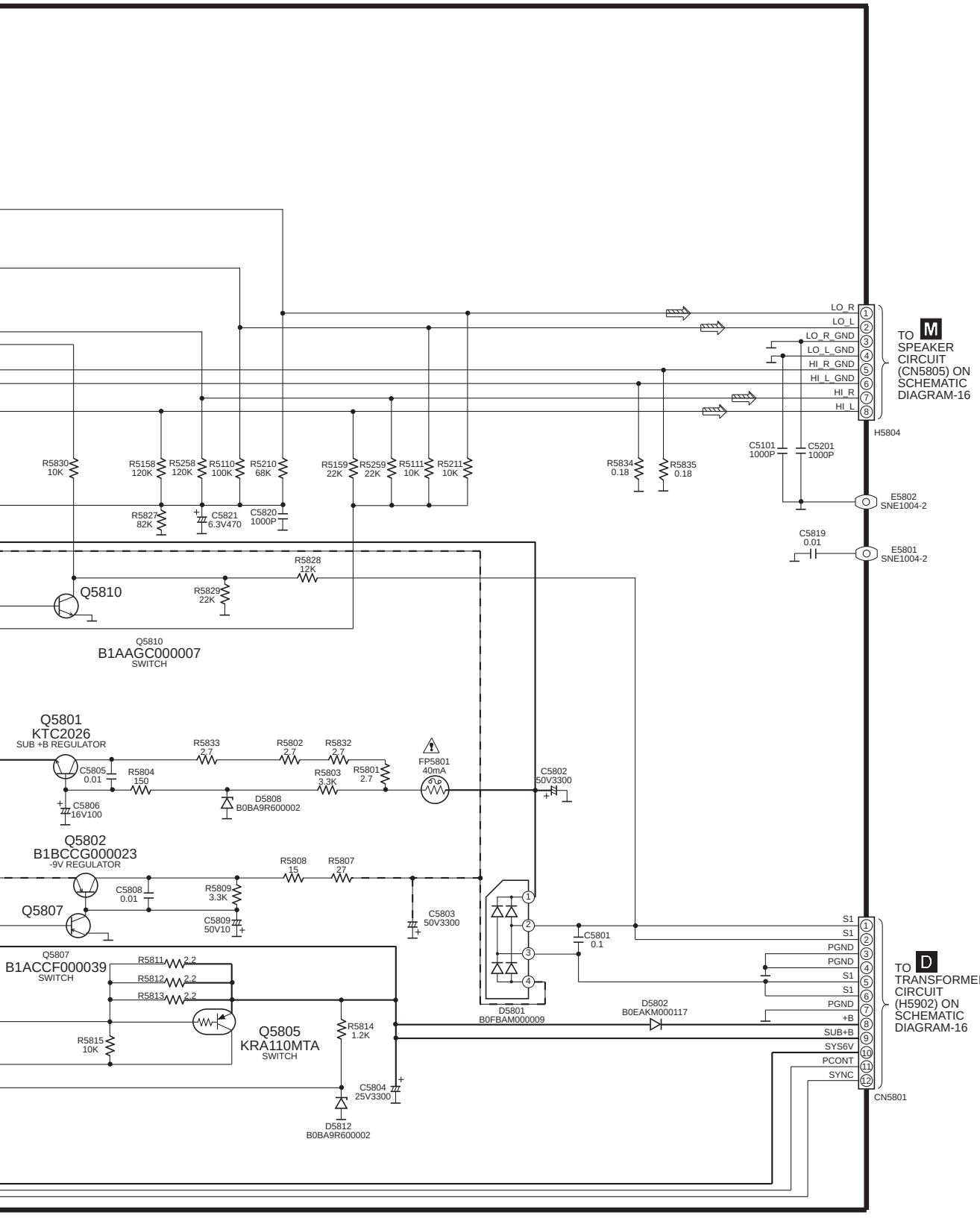

SCHEMATIC DIAGRAM-19

F DECK CIRCUIT

: +B SIGNAL LINE

: TAPE PLAYBACK SIGNAL LINE

: TAPE RECORD SIGNAL LINE

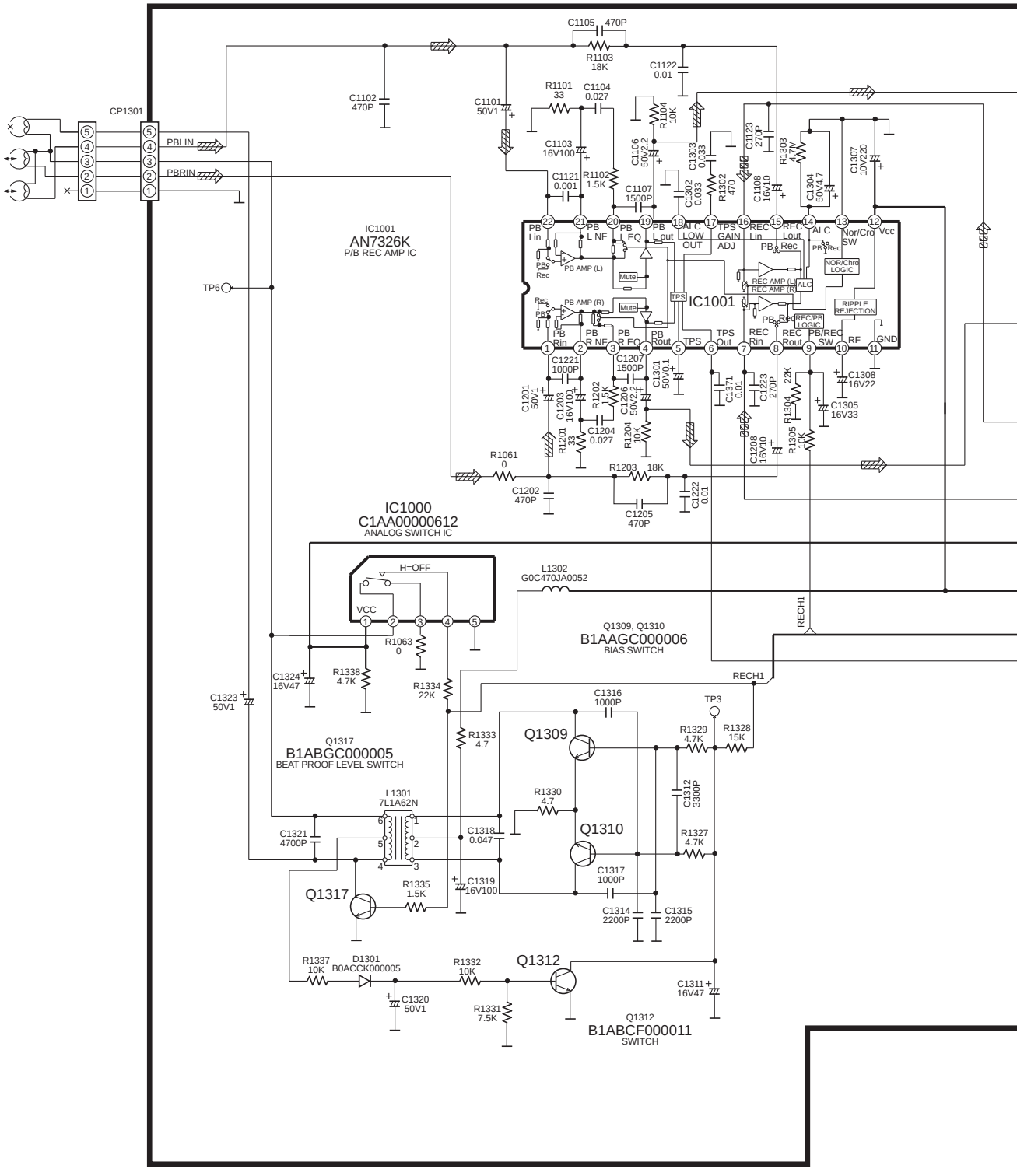

SCHEMATIC DIAGRAM-20

F DECK CIRCUIT

: +B SIGNAL LINE

: TAPE PLAYBACK SIGNAL LINE

: TAPE RECORD SIGNAL LINE

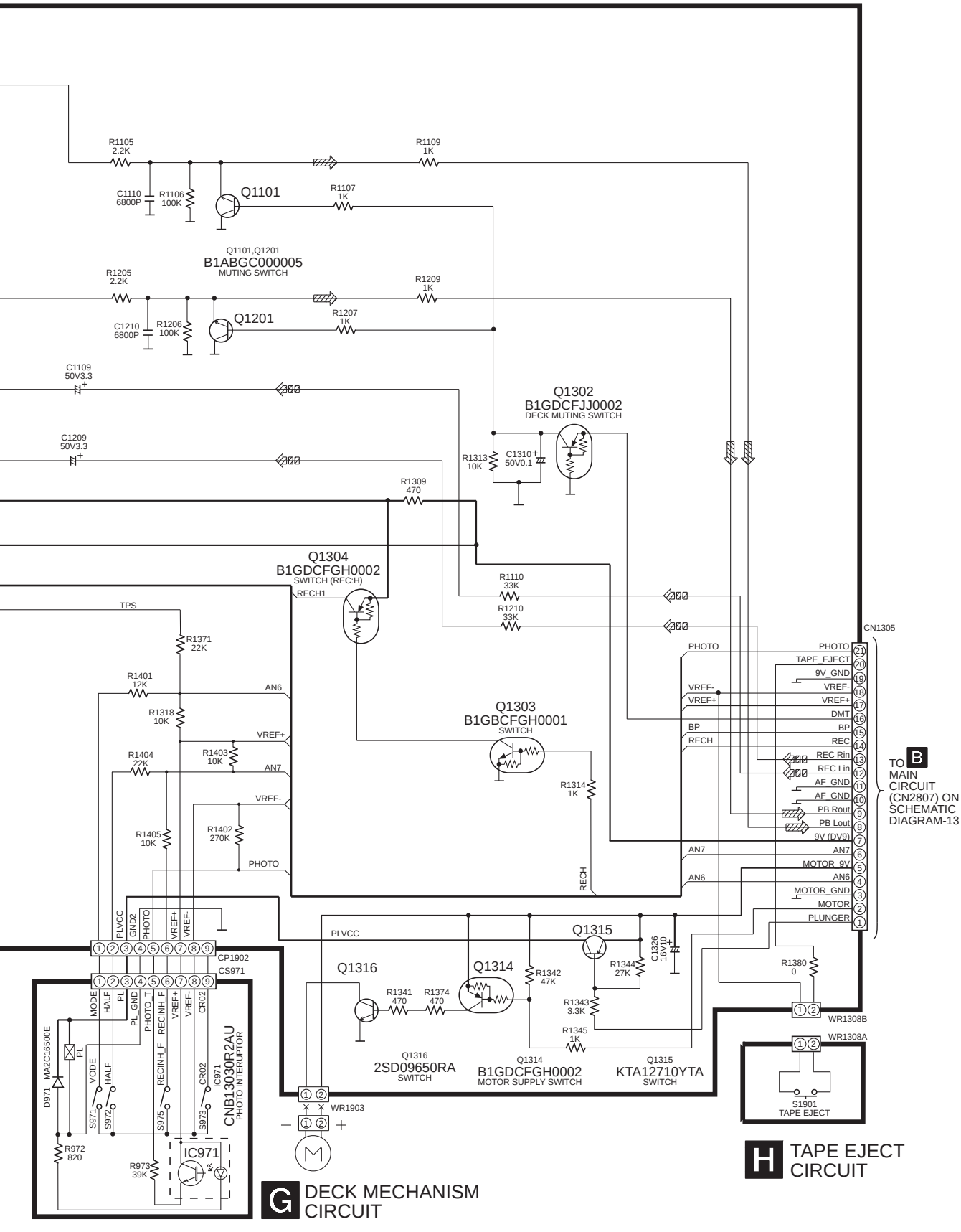

G DECK MECHANISM CIRCUIT

H TAPE EJECT CIRCUIT

SCHEMATIC DIAGRAM-21

I CD LOADING CIRCUIT

: +B SIGNAL LINE

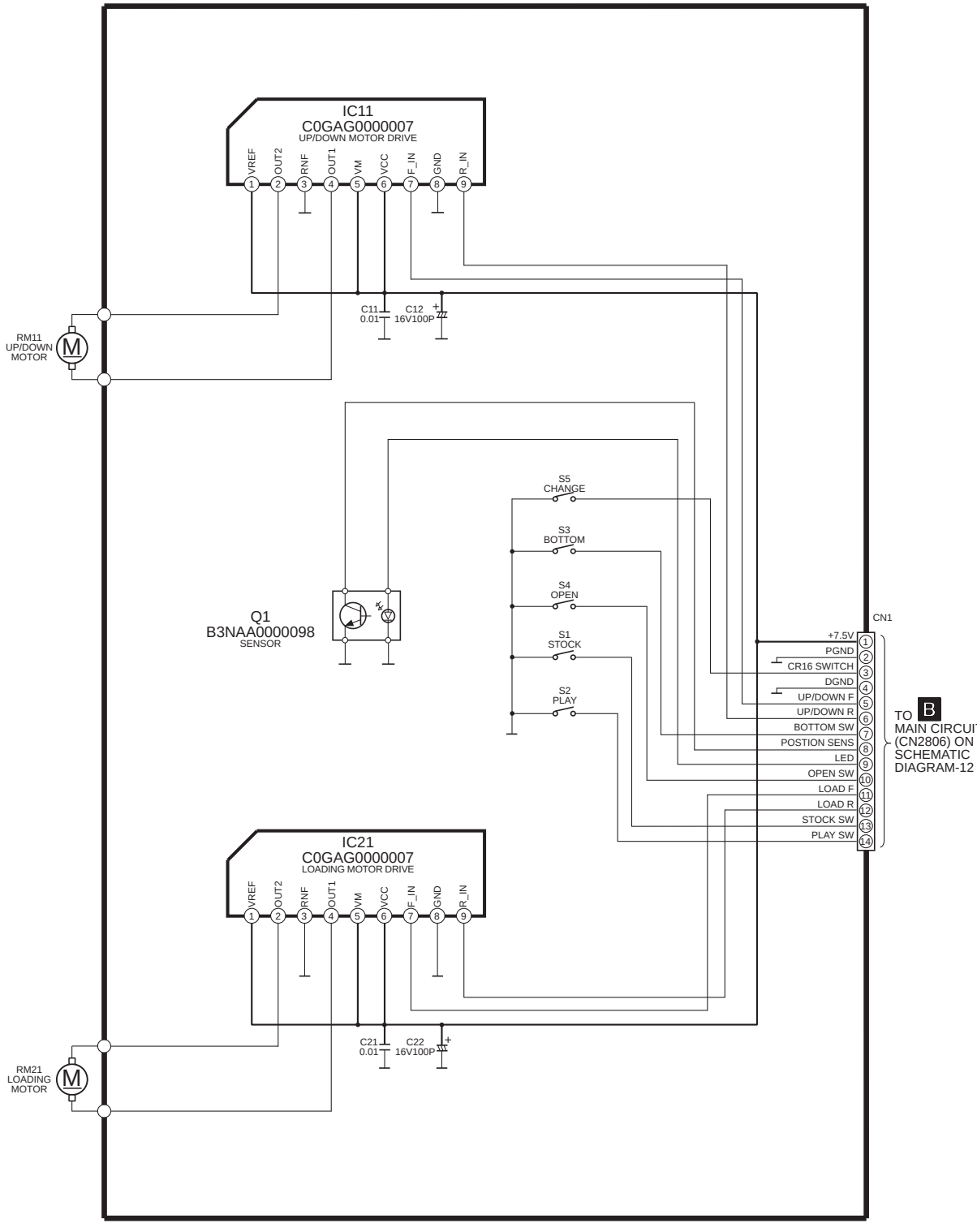

DVD MODULE P.C.B.

Ref No.	IC8001																			
MODE	1	2	3	4	5	6	7	8	9	10	11	12	13	14	15	16	17	18	19	20
CD PLAY	3.1	3.0	0	3.0	3.2	3.3	2.9	3.0	0	3.0	3.0	3.3	2.8	3.1	2.8	0	2.8	2.9	3.3	0
STANDBY	0	0	0	0	0	0	0	0	0	0	0	0	0	0	0	0	0	0	0	0
Ref No.	IC8001																			
MODE	21	22	23	24	25	26	27	28	29	30	31	32	33	34	35	36	37	38	39	40
CD PLAY	0	3.3	0	2.3	0	1.3	0	3.3	0	0.5	0	0	0	3.3	0	1.2	0.5	0.3	3.3	3.3
STANDBY	0	0	0	0	0	0	0	0	0	0	0	0	0	0	0	0	0	0	0	0
Ref No.	IC8001																			
MODE	41	42	43	44	45	46	47	48	49	50	51	52	53	54	55	56	57	58	59	60
CD PLAY	2.5	2.9	2.0	1.3	1.8	0.8	0.8	3.3	0	2.5	2.7	2.5	3.3	0	0	2.9	3.3	1.4	0	3.3
STANDBY	0	0	0	0	0	0	0	0	0	0	0	0	0	0	0	0	0	0	0	0
Ref No.	IC8001																			
MODE	61	62	63	64	65	66	67	68	69	70	71	72	73	74	75	76	77	78	79	80
CD PLAY	0	3.3	0	0	0	1.4	0	3.0	2.8	3.2	0	0	1.9	0	1.7	1.9	1.7	0	3.3	0
STANDBY	0	0	0	0	0	0	0	0	0	0	0	0	0	0	0	0	0	0	0	0
Ref No.	IC8001																			
MODE	81	82	83	84	85	86	87	88	89	90	91	92	93	94	95	96	97	98	99	100
CD PLAY	3.3	3.3	3.3	3.3	0	0	0	0	1.3	0	0	0	0	0	0	0	0	0	0.8	0
STANDBY	0	0	0	0	0	0	0	0	0	0	0	0	0	0	0	0	0	0	0	0
Ref No.	IC8001																			
MODE	101	102	103	104	105	106	107	108	109	110	111	112	113	114	115	116	117	118	119	120
CD PLAY	2.4	2.1	1.8	0.4	0	1.8	0	2.1	2.1	1.8	1.8	1.4	1.4	1.7	1.7	1.7	1.7	3.3	1.9	1.7
STANDBY	0	0	0	0	0	0	0	0	0	0	0	0	0	0	0	0	0	0	0	0
Ref No.	IC8001																			
MODE	121	122	123	124	125	126	127	128	129	130	131	132	133	134	135	136	137	138	139	140
CD PLAY	1.4	0	0.5	0.1	0.2	1.1	2.2	1.7	2.6	2.6	2.6	2.6	2.6	2.6	2.6	2.6	2.6	2.6	1.7	1.7
STANDBY	0	0	0	0	0	0	0	0	0	0	0	0	0	0	0	0	0	0	0	0
Ref No.	IC8001																			
MODE	141	142	143	144	145	146	147	148	149	150	151	152	153	154	155	156	157	158	159	160
CD PLAY	3.3	1.2	1.9	2.2	0	1.7	1.7	1.7	0.4	3.3	0.5	0.4	1.0	1.0	2.2	0.4	0	0	0	0
STANDBY	0	0	0	0	0	0	0	0	0	0	0	0	0	0	0	0	0	0	0	0
Ref No.	IC8001																			
MODE	161	162	163	164	165	166	167	168	169	170	171	172	173	174	175	176	177	178	179	180
CD PLAY	0	0	1.6	0	1.5	0	3.3	0.1	1.7	1.7	0.9	1.3	0	0	0	0.9	0	3.3	0	3.3
STANDBY	0	0	0	0	0	0	0	0	0	0	0	0	0	0	0	0	0	0	0	0
Ref No.	IC8001																			
MODE	181	182	183	184	185	186	187	188	189	190	191	192	193	194	195	196	197	198	199	200
CD PLAY	0	0	0	0	0	0	0	0	0	3.3	0	0.8	1.6	0.7	1.6	3.3	0.9	1.6	1.4	1.4
STANDBY	0	0	0	0	0	0	0	0	0	0	0	0	0	0	0	0	0	0	0	0
Ref No.	IC8001																			
MODE	201	202	203	204	205	206	207	208	209	210	211	212	213	214	215	216	217	218	219	220
CD PLAY	0	3.3	1.0	1.6	0	1.6	1.7	1.9	3.3	0.9	2.2	0.8	0	2.6	2.6	3.3	2.0	0	1.3	1.6
STANDBY	0	0	0	0	0	0	0	0	0	0	0	0	0	0	0	0	0	0	0	0
Ref No.	IC8001																			
MODE	221	222	223	224	225	226	227	228	229	230	231	232	233	234	235	236	237	238	239	240
CD PLAY	0.2	0	1.6	0.2	3.3	1.6	0	0	0	0	0.2	0	1.6	0.2	3.3	1.7	0	1.6	0	0
STANDBY	0	0	0	0	0	0	0	0	0	0	0	0	0	0	0	0	0	0	0	0
Ref No.	IC8001																			
MODE	241	242	243	244	245	246	247	248	249	250	251	252	253	254	255	256	257	258	259	260
CD PLAY	3.3	1.6	0	0	2.1	0	1.3	0	0	3.4	3.1	1.6	0	3.2	3.2	3.3	0	3.3	2.6	0
STANDBY	0	0	0	0	0	0	0	0	0	0	0	0	0	0	0	0	0	0	0	0
Ref No.	IC8001																			
MODE	261	262	263	264	265	266														
CD PLAY	2.6	2.8	0	2.8	3.3	2.9														
STANDBY	0	0	0	0	0	0														

Ref No.	IC8051																			
MODE	1	2	3	4	5	6	7	8	9	10	11	12	13	14	15	16	17	18	19	20
CD PLAY	0	2.8	3.3	3.1	3.0	0	3.0	3.2	3.4	3.0	3.0	0	2.8	3.3	2.6	3.3	3.2	3.2	3.1	2.1
STANDBY	0	0	0	0	0	0	0	0	0	0	0	0	0	0	0	0	0	0	0	0

Ref No.	IC8051																			
MODE	21	22	23	24	25	26	27	28	29	30	31	32	33	34	35	36	37	38	39	40
CD PLAY	1.6	0.1	0.1	0.2	0.2	2.0	3.3	0	1.6	1.6	1.7	1.6	0	0	0	0	0	0	2.6	0
STANDBY	0	0	0	0	0	0	0	0	0	0	0	0	0	0	0	0	0	0	0	0

Ref No.	IC8051													
MODE	41	42	43	44	45	46	47	48	49	50	51	52	53	54
CD PLAY	0	2.8	0	3.1	3.1	0	0	3.0	3.3	2.8	2.8	0	0	0
STANDBY	0	0	0	0	0	0	0	0	0	0	0	0	0	0

Ref No.	IC8111							
MODE	1	2	3	4	5	6	7	8
CD PLAY	3.3	0	0	2.0	4.6	0	0	4.9
STANDBY	0	0	0	0	0	0	0	0

Ref No.	IC8251																			
MODE	1	2	3	4	5	6	7	8	9	10	11	12	13	14	15	16	17	18	19	20
CD PLAY	1.7	1.7	1.7	1.8	1.8	1.7	0	4.9	3.3	0	2.4	2.5	2.5	4.4	4.4	4.4	4.9	3.8	0	3.3
STANDBY	0	0	0	0	0	0	0	0	0	0	0	0	0	0	0	0	0	0	0	0

Ref No.	IC8251							
MODE	21	22	23	24	25	26	27	28
CD PLAY	9.2	9.1	1.7	1.7	1.7	1.7	3.3	3.1
STANDBY	0	0	0	0	0	0	0	0

Ref No.	IC8420															
MODE	1	2	3	4	5	6	7	8	9	10	11	12	13	14	15	16
CD PLAY	0	3.3	2.9	3.3	1.7	0.8	1.7	1.7	0	0	5.50	0	2.5	2.4	2.4	4.9
STANDBY	0	0	0	0	0	0	0	0	0	0	0	0	0	0	0	0

Ref No.	IC8601		
MODE	1	2	3
CD PLAY	0	3.1	3.3
STANDBY	0	0	0

Ref No.	IC8606				
MODE	1	2	3	4	5
CD PLAY	0.6	1.3	0	0	1.2
STANDBY	0	0	0	0	0

Ref No.	IC8611							
MODE	1	2	3	4	5	6	7	8
CD PLAY	0	0	0	0	3.3	0	0	3.3
STANDBY	0	0	0	0	0	0	0	0

Ref No.	IC8651																			
MODE	1	2	3	4	5	6	7	8	9	10	11	12	13	14	15	16	17	18	19	20
CD PLAY	0.9	0.8	2.9	0.8	0.8	0.8	2.6	0.8	3.4	0	3.3	3.1	3.3	3.3	0.7	2.1	2.4	1.2	2.4	2.4
STANDBY	0	0	0	0	0	0	0	0	0	0	0	0	0	0	0.4	0	0	0	0	0

Ref No.	IC8651																			
MODE	21	22	23	24	25	26	27	28	29	30	31	32	33	34	35	36	37	38	39	40
CD PLAY	2.1	0	2.6	2.6	2.7	2.4	0	2.3	0.7	0.8	0.8	0.7	1.5	0	1.6	1.5	0	1.4	0.9	1.7
STANDBY	0	0	0	0	0	0	0	0	0	0	0	0	0	0	0	0	0	0	0	0

Ref No.	IC8651							
MODE	41	42	43	44	45	46	47	48
CD PLAY	1.7	1.6	2.0	1.8	2.2	0	3.3	0.5
STANDBY	0	0	0	0	0	0	0	0

Ref No.	IC8691				
MODE	1	2	3	4	5
CD PLAY	3.0	3.0	0	0	4.9
STANDBY	0	0	0	0	0

Ref No.	IC8695				
MODE	1	2	3	4	5
CD PLAY	2.8	2.8	0	0	4.9
STANDBY	0	0	0	0	0

Ref No.	QR8111			QR8112			QR8420			Q8550			Q8551		
MODE	E	C	B	E	C	B	E	C	B	E	C	B	E	C	B
CD PLAY	0	0	1.3	0	4.5	0	0	4.2	0	5.0	4.9	4.2	0	4.9	0.1
STANDBY	0	0	0	0	0	0	0	0	0	0	0	0	0	0	0

Ref No.	Q8552			Q8560			Q8561			Q8562			QR8571		
MODE	E	C	B	E	C	B	1	2	3	E	C	B	E	C	B
CD PLAY	4.9	0	4.9	0	0	0.7	0.5	3.7	1.1	4.3	2.3	3.7	3.4	3.3	0.1
STANDBY	0	0	0	0	0	0	0	0	0	0	0	0	0	-1.0	0

Ref No.	Q8606			Q8607		
MODE	E	C	B	E	C	B
CD PLAY	0	0	0.6	0	3.1	0
STANDBY	0	0	0	0	0	0

CD LOADING P.C.B.

Ref No.	IC 11																			
MODE	1	2	3	4	5	6	7	8	9											
CD PLAY	7.5	0	0	0	7.5	7.5	4.8	0	4.8											
STANDBY	1.7	0	0	0	1.7	1.7	2.7	0	2.8											

Ref No.	IC 21																			
MODE	1	2	3	4	5	6	7	8	9											
CD PLAY	7.5	0	0	0	7.5	7.5	4.8	0	4.8											
STANDBY	1.7	0	0	0	1.7	1.7	2.7	0	2.7											

Ref No.	Q1																			
MODE	1	2	3	4																
CD PLAY	0.3	1.2	0	0																
STANDBY	0	0	0	0																

MAIN P.C.B.

Ref No.	IC2801																			
MODE	1	2	3	4	5	6	7	8	9	10	11	12	13	14	15	16	17	18	19	20
CD PLAY	0	5.1	5.1	5.1	0.3	0	0	0	0	0.6	0.7	5.0	2.5	0	-	5.1	5.1	4.9	3.6	5.1
STANDBY	0	5.0	5.0	0	0	0	0	0	0	0.7	0.7	5.1	2.5	0	2.4	5.2	5.1	5.1	3.5	5.0

Ref No.	IC2801																			
MODE	21	22	23	24	25	26	27	28	29	30	31	32	33	34	35	36	37	38	39	40
CD PLAY	5.0	5.0	0	0	0	5.1	5.0	5.0	5.0	5.0	1.6	0	0	0	3.9	4.0	4.4	0	0	5.0
STANDBY	0	0	0	0	0	5.0	3.4	3.6	5.1	5.1	0.9	0	0	0	0	0.1	0.1	0	0	0

Ref No.	IC2801																			
MODE	41	42	43	44	45	46	47	48	49	50	51	52	53	54	55	56	57	58	59	60
CD PLAY	0	5.0	0	0	5.1	0	0	0	0	0	0	0	0	0	2.5	0	0	0	0	0
STANDBY	0	0	0	0	5.1	0	0	0	0	0	0	0	0	0	2.6	0	0	0	0	0

Ref No.	IC2801																			
MODE	61	62	63	64	65	66	67	68	69	70	71	72	73	74	75	76	77	78	79	80
CD PLAY	0	5.1	0	0	0	0	0	5.1	0	5.0	0	3.2	0	0	0	0	1.5	0	4.3	4.9
STANDBY	0	5.1	0	0	0	0	0	0	0	5.1	0	0	0	0	0	0	0	0	0	0

Ref No.	IC2801																			
MODE	81	82	83	84	85	86	87	88	89	90	91	92	93	94	95	96	97	98	99	100
CD PLAY	0	0	0	4.1	2.1	4.8	5.1	3.1	5.0	5.0	2.2	5.0	0.4	2.5	3.8	0	5.0	5.0	5.0	0
STANDBY	0	0	0	0	0	0	0	0	0	0	2.3	5.1	0.4	2.5	3.8	0	5.0	5.0	5.0	0

Ref No.	IC2802																			
MODE	1	2	3	4	5	6	7	8												
CD PLAY	0	5.0	0	0	0	0	0	0												
STANDBY	0	5.2	0	0	0	0	0	0												

Ref No.	IC2803																			
MODE	1	2	3	4	5															
CD PLAY	14.1	2.5	0	1.2	3.0															
STANDBY	0.5	0	0	0	0															

Ref No.	IC2804																			
MODE	1	2	3	4	5															
CD PLAY	14.1	6.0	0	1.2	4.9															
STANDBY	0.5	0	0	0	0															

Ref No.	IC2805																			
MODE	1	2	3	4	5															
CD PLAY	2.5	5.0	1.4	1.0	0															
STANDBY	0	0	0	0	0															

Ref No.	IC2806																			
MODE	1	2	3	4	5															
CD PLAY	5.9	5.9	5.0	0	0															
STANDBY	0	0	0	0	0															

Ref No.	IC2807																			
MODE	1	2	3	4	5															
CD PLAY	5.9	5.9	5.0	0	0															
STANDBY	0	0	0	0	0															

Ref No.	IC2808																			
MODE	1	2	3	4	5	6	7	8	9	10	11	12	13	14	15	16	17	18	19	20
CD PLAY	4.9	2.3	4.9	0	0	1.7	2.4	0	0	0	0	0	4.9	2.3	4.9	2.3	0	2.2	2.2	0
STANDBY	0	0	0	0	0	0	0	0	0	0	0	0	0	0.1	4.9	0.2	0	0	0	0

Ref No.	IC2808													
MODE	21	22	23	24	25	26	27	28	29	30	31	32	33	34
CD PLAY	2.2	2.3	0	2.2	2.2	0	1.8	1.8	0	1.7	1.7	0	2.2	4.9
STANDBY	0	0	0	0	0	0	0	0	0	0	0	0	0	0

Ref No.	IC2812																			
MODE	1	2	3	4	5	6	7	8	9	10	11	12	13	14	15	16	17	18	19	20
CD PLAY	4.3	4.3	4.3	4.3	0	4.3	4.3	4.3	4.3	4.3	4.3	4.3	4.3	4.3	4.3	4.3	4.3	0	0	0
STANDBY	0.3	0.3	0.3	0.3	0	0.4	0.4	0.4	0.4	0.3	0.3	0.3	0.3	0.3	0.3	0.3	0	0	0	0

Ref No.	IC2812																			
MODE	21	22	23	24	25	26	27	28	29	30	31	32	33	34	35	36	37	38	39	40
CD PLAY	8.6	0	4.3	4.3	4.3	4.3	4.3	4.3	4.3	4.3	4.3	4.3	4.3	4.3	4.3	4.3	4.3	4.3	4.3	4.3
STANDBY	0	0	0.1	0.1	0.1	0.1	0.1	0.1	0.2	0.2	0.1	0.1	0.1	0	0	0	0	0	0	0

Ref No.	IC2813							
MODE	1	2	3	4	5	6	7	8
CD PLAY	0	0	0	-9.1	0	0	0	9.0
STANDBY	0	0	0	0	0	0	0	0

Ref No.	IC2814							
MODE	1	2	3	4	5	6	7	8
CD PLAY	0	0	0	-9.1	0	0	0	9.0
STANDBY	0	0	0	0	0	0	0	0

Ref No.	Q2101				Q2102				Q2103				Q2201				Q2202			
MODE	E	C	B		E	C	B		E	C	B		E	C	B		E	C	B	
CD PLAY	0	0	0		0	0	-6.3		0	0	-6.3		0	0	0		0	0	-6.3	
STANDBY	0	0	0		0	0	0		0	0	0		0	0	0		0	0	0	

Ref No.	Q2203				Q2204				Q2205				Q2803				Q2806			
MODE	E	C	B		E	C	B		1	2	3		E	C	B		E	C	B	
CD PLAY	0	0	-6.3		0	0	-6.3		0	0	-6.3		0	5.0	0		10.0	0	10.0	
STANDBY	0	0	0		0	0	0		0	0	0		0	5.0	0		0.2	0	0.2	

Ref No.	Q2807				Q2808				Q2809				Q2810				Q2811			
MODE	E	C	B		E	C	B		E	C	B		E	C	B		E	C	B	
CD PLAY	0	0	0.2		0	3.1	0		0	10.0	0		0	-1.3	0		0	-1.3	0	
STANDBY	0	0	0		0	0	0		0	0.2	0		0	-3.2	0		0	-3.2	0	

Ref No.	Q2812				Q2813				Q2814				Q2815				Q2816			
MODE	E	C	B		E	C	B		E	C	B		E	C	B		E	C	B	
CD PLAY	0	-6.2	0		0	0	3.7		5.0	5.0	4.3		5.0	4.9	4.3		0	0	0	
STANDBY	0	0	0		0	5.2	0		5.2	5.2	4.5		5.2	0	5.2		0	0	0	

Ref No.	Q2817				Q2818				Q2826				Q2827							
MODE	E	C	B		E	C	B		E	C	B		E	C	B					
CD PLAY	0	10.0	0		0	10.0	0		0	0	4.2		5.8	7.6	5.1					
STANDBY	0	0.2	0		0	0.2	0		0	0	0		1.7	1.7	1.2					

HARMONIC BASS P.C.B.

Ref No.	IC2816																			
MODE	1	2	3	4	5	6	7	8												
CD PLAY	0	0	0	-9.2	0	0	0	9.1												
STANDBY	0	0	0	-0.2	0	0	0	0												

Ref No.	IC2817																			
MODE	1	2	3	4	5	6	7	8												
CD PLAY	0	0	0	-9.2	0	0	0	9.1												
STANDBY	0	0	0	-0.2	0	0	0	0												

Ref No.	IC2818																			
MODE	1	2	3	4	5	6	7	8												
CD PLAY	0	0	0	-9.2	0	0	0	9.1												
STANDBY	0	0	0	-0.2	0	0	0	0												

Ref No.	Q3000				Q3001				Q3002				Q3003							
MODE	E	C	B		E	C	B		E	C	B		E	C	B					
CD PLAY	0	0	-0.9		0	0	-0.9		0	-0.7	0		0	-0.7	0					
STANDBY	0	0	-2.1		0	0	-2.1		0	-2.1	0		0	-2.1	0					

PANEL P.C.B.

Ref No.	IC601																			
MODE	1	2	3	4	5	6	7	8	9	10	11	12	13	14	15	16	17	18	19	20
CD PLAY	-29.5	-29.4	-29.4	-29.5	5.0	3.0	4.1	2.1	0	0	5.1	2.2	2.2	0	-27.5	-31.4	-23.4	-25.4	-23.4	-31.6
STANDBY	0	0	0	0	0	0	0	0	0	0	0	0	0	0	0	0	0	0	0	0

Ref No.	IC601																			
MODE	21	22	23	24	25	26	27	28	29	30	31	32	33	34	35	36	37	38	39	40
CD PLAY	-25.4	-29.5	-27.5	-31.7	-25.5	-23.3	-23.4	-29.6	-25.4	-29.5	-21.3	-25.4	-25.4	-27.5	-23.4	-23.4	-25.3	-25.4	-29.5	-27.5
STANDBY	0	0	0	0	0	0	0	0	0	0	0	0	0	0	0	0	0	0	0	0

Ref No.	IC601																			
MODE	41	42	43	44	45	46	47	48	49	50	51	52	53	54	55	56	57	58	59	60
CD PLAY	-25.4	-31.6	-21.3	-25.4	-25.4	-25.4	-31.7	-29.6	-29.5	-29.5	-29.5	-29.5	-29.5	-29.5	-29.5	-29.5	-29.5	-29.5	-29.5	-29.5
STANDBY	0	0	0	0	0	0	0	0	0	0	0	0	0	0	0	0	0	0	0	0

Ref No.	IC601																			
MODE	61	62	63	64																
CD PLAY	-29.5	-29.5	-29.5	-29.5																
STANDBY	0	0	0	0																

Ref No.	Q601				Q602				Q603				Q611				Q680			
MODE	E	C	B		E	C	B		E	C	B		E	C	B		E	C	B	
CD PLAY	-33.0	5.0	-33.1		-33.0	5.0	-33.1		0	0	0.8		0	3.1	-0.4		0	3.6	0	
STANDBY	0	0	0		0	0	0		0	0	0		0	0	0		0	3.8	0	

DECK P.C.B.

Ref No.	IC 1000																			
MODE	1	2	3	4	5															
CD PLAY	6.1	0	0	0	0															
STANDBY	0	0	0	0	0															

Ref No.	IC 1001																			
MODE	1	2	3	4	5	6	7	8	9	10	11	12	13	14	15	16	17	18	19	20
CD PLAY	0	0.7	5.2	4.4	0	4.9	0	0	0	6.0	0	8.9	0	0	0	0	3.8	0.2	4.4	5.1
STANDBY	0	0.3	0.3	0.3	0	0	0	0	0	0	0	0	0	0	0	0	0	0	0.3	0.3

Ref No.	IC 1001																			
MODE	21	22																		
CD PLAY	0.7	0																		
STANDBY	0.3	0																		

Ref No.	Q1101				Q1201				Q1302				Q1303				Q1304			
MODE	E	C	B		E	C	B		E	C	B		E	C	B		E	C	B	
CD PLAY	0	0	0.7		0	0	0.7		2.0	1.9	0		0	5.8	0		5.8	0	5.8	
STANDBY	0	0	0		0	0	0		0	0	0		0	0	0		0	0	0	

Ref No.	Q1309				Q1310				Q1312				Q1314				Q1315			
MODE	E	C	B		E	C	B		E	C	B		E	C	B		E	C	B	
CD PLAY	0	8.8	0		0	8.8	0		0	0	0		10.0	-0.1	10.0		10.0	0	10.0	
STANDBY	0	0	0		0	0	0		0	0	0		0.2	-0.2	0.2		0.2	0	0.2	

Ref No.	Q1316				Q1317															
MODE	E	C	B		E	C	B													
CD PLAY	0	9.4	-0.2		0	0	0													
STANDBY	0	0	-0.2		0	0	0													

DECK MECHANISM P.C.B.

Ref No.	IC971																			
MODE	1	2	3	4																
CD PLAY	2.5	4.9	3.8	4.9																
STANDBY	0	0	0	0																

POWER P.C.B.

Ref No.	IC500																			
MODE	1	2	3	4	5	6	7	8	9	10	11	12	13	14	15	16	17	18		
CD PLAY	-34.5	34.2	0	34.2	-34.5	0	0	0.7	0	-15.1	0	0	0	0	0	0	34.2	-34.5		
STANDBY	-0.4	0.4	0	0.4	-0.4	0	0	0	0	-0.4	0	0	0	0	0	0	0.4	-0.4		
Ref No.	Q5101				Q5102				Q5201				Q5202				Q5801			
MODE	E	C	B		E	C	B		E	C	B		E	C	B		E	C	B	
CD PLAY	-0.8	9.2	-0.1		-0.9	9.2	-0.2		-0.8	9.2	-0.1		-0.9	9.2	-0.2		9.2	32.9	9.8	
STANDBY	0	0	0		0	0	0		0	0	0		0	0	0		0	0.3	0.3	
Ref No.	Q5802				Q5803				Q5804				Q5805				Q5807			
MODE	E	C	B		E	C	B		E	C	B		E	C	B		E	C	B	
CD PLAY	-9.3	-33.1	-9.8		9.3	15.7	9.9		16.3	10.1	15.7		16.5	15.6	16.4		0	-9.8	-0.6	
STANDBY	-0.1	-0.5	-0.5		0	0.1	0.5		0.5	0.2	0.4		0.5	0.4	0.5		0	-0.4	0	
Ref No.	Q5808				Q5809				Q5810											
MODE	E	C	B		E	C	B		E	C	B									
CD PLAY	0	3.1	0		0	3.1	0		0	4.2	-0.2									
STANDBY	0	0	0		0	0	0		0	0	0.1									

TRANSFORMER P.C.B.

Ref No.	Q5901				Q5902				Q5903				Q5904							
MODE	E	C	B		E	C	B		E	C	B		E	C	B					
CD PLAY	-32.4	-58.6	-33.0		0	0	0.6		0	3.6	-0.2		6.0	11.8	6.6					
STANDBY	0.2	-0.1	0		0	6.0	0		0	3.6	-0.2		6.0	9.0	6.6					

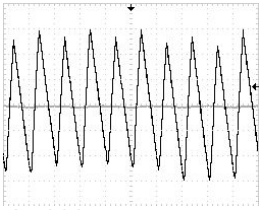

CN2801 PIN 1
CD PLAY
1.18Vp-p (10msec.div)

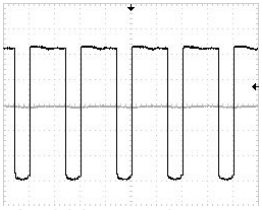

CN2801 PIN 8
CD PLAY
5.28Vp-p (10msec.div)

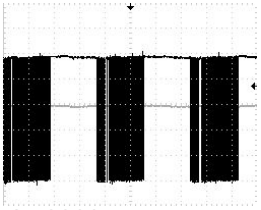

CN2803 PIN 1
CD PLAY
5.24Vp-p (10msec.div)

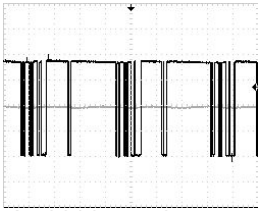

CN2803 PIN 2
CD PLAY
4.20Vp-p (10msec.div)

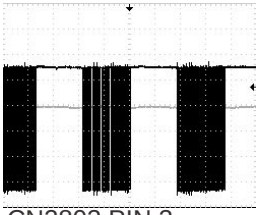

CN2803 PIN 3
CD PLAY
5.24Vp-p (10msec.div)

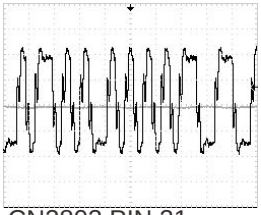

CN2803 PIN 21
CD PLAY
4.24Vp-p (500nsec.div)

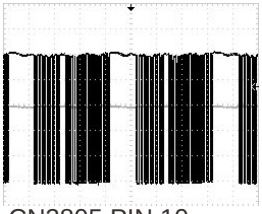

CN2805 PIN 10
CD PLAY
5.28Vp-p (10msec.div)

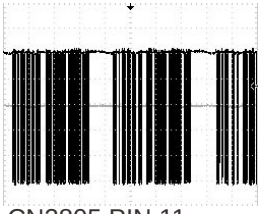

CN2805 PIN 11
CD PLAY
5.36Vp-p (10msec.div)

CN2805 PIN 12
CD PLAY
5.44Vp-p (10msec.div)

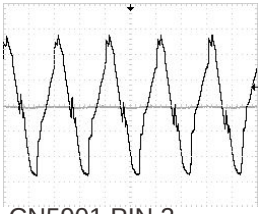

CN5901 PIN 2
CD PLAY
5.52Vp-p (10msec.div)

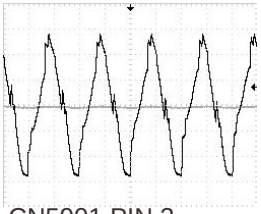

CN5901 PIN 3
CD PLAY
5.56Vp-p (10msec.div)

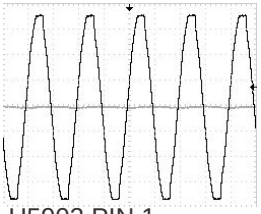

H5902 PIN 1
CD PLAY
72.4Vp-p (10msec.div)

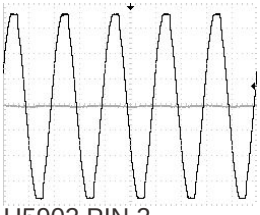

H5902 PIN 2
CD PLAY
72.8Vp-p (10msec.div)

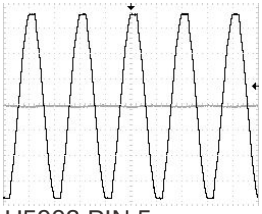

H5902 PIN 5
CD PLAY
72.8Vp-p (10msec.div)

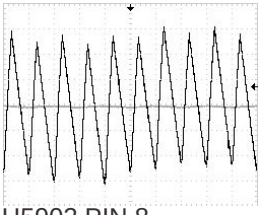

H5902 PIN 8
CD PLAY
1.24Vp-p (10msec.div)

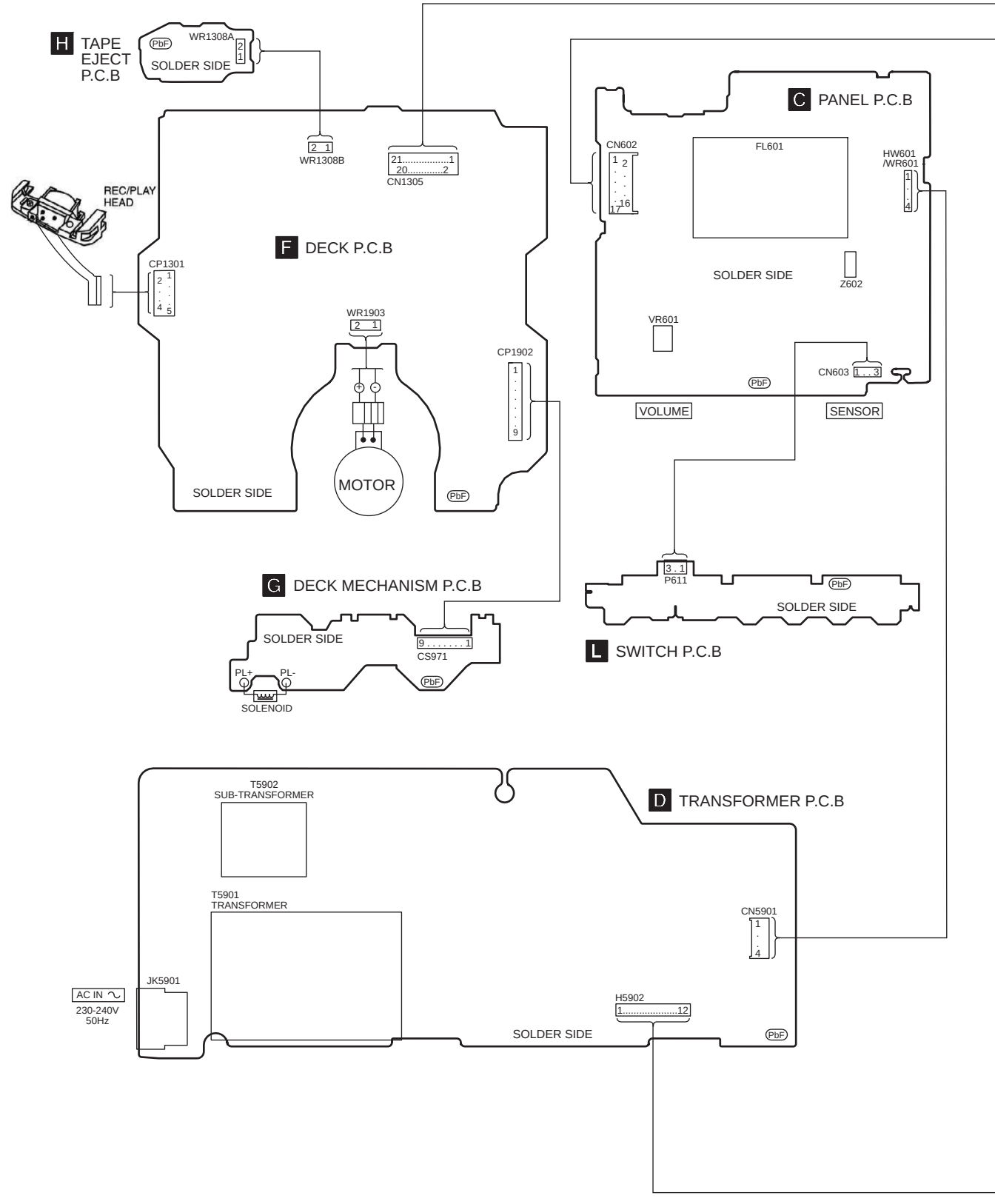
H TAPE EJECT P.C.B
PbF
WR1308A
2
1
SOLDER SIDE
WR1308B
2 1
21.....1
20.....2
CN1305
REC/PLAY HEAD
CP1301
1
2
4
5
F DECK P.C.B
WR1903
2 1
MOTOR
CP1902
1
9
SOLDER SIDE
PbF
C PANEL P.C.B
CN602
1
2
16
17
FL601
HW601 /WR601
1
4
SOLDER SIDE
Z602
VR601
CN603
1 . . 3
PbF
VOLUME
SENSOR
G DECK MECHANISM P.C.B
SOLDER SIDE
9 1
CS971
PL+
PL-
SOLENOID
PbF
3 . 1
P611
PbF
SOLDER SIDE
L SWITCH P.C.B
T5902
SUB-TRANSFORMER
D TRANSFORMER P.C.B
T5901
TRANSFORMER
CN5901
1
4
JK5901
AC IN
230-240V
50Hz
H5902
1.....12
SOLDER SIDE
PbF

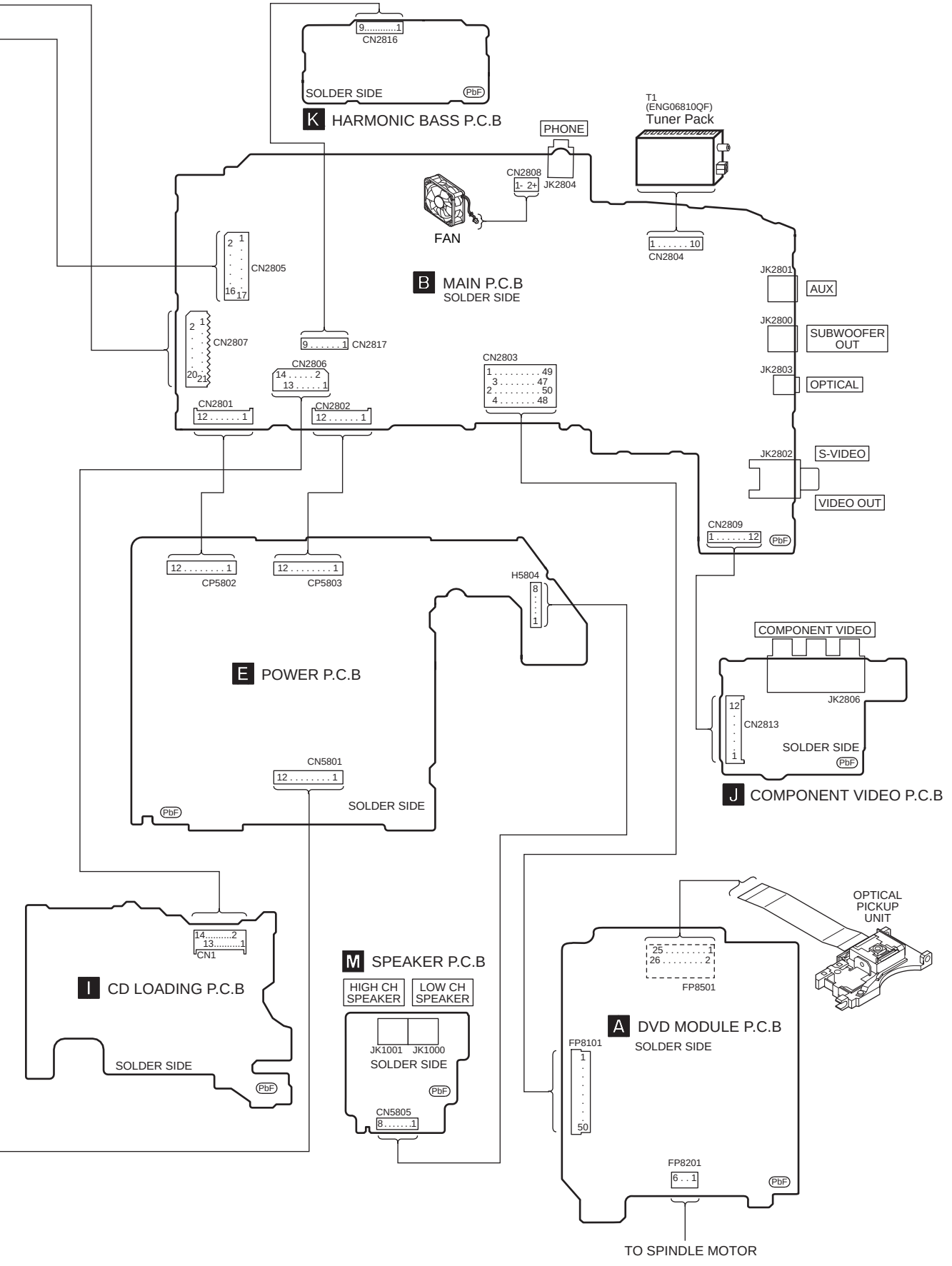
9.....1
CN2816
SOLDER SIDE
PbF
K HARMONIC BASS P.C.B
PHONE
T1
(ENG06810QF)
Tuner Pack
CN2808
1- 2+
JK2804
FAN
1 10
CN2804
2 1
16 17
CN2805
B MAIN P.C.B
SOLDER SIDE
JK2801
AUX
JK2800
SUBWOOFER OUT
2 1
20 21
CN2807
9 1
CN2817
CN2806
14 2
13 1
CN2803
1 49
3 47
2 50
4 48
JK2803
OPTICAL
CN2801
12 1
CN2802
12 1
JK2802
S-VIDEO
VIDEO OUT
CN2809
1 12
PbF
12 1
CP5802
12 1
CP5803
H5804
8
1
E POWER P.C.B
COMPONENT VIDEO
JK2806
12
1
CN2813
SOLDER SIDE
PbF
J COMPONENT VIDEO P.C.B
CN5801
12 1
SOLDER SIDE
PbF
OPTICAL PICKUP UNIT
14.....2
13.....1
CN1
I CD LOADING P.C.B
SOLDER SIDE
PbF
M SPEAKER P.C.B
HIGH CH SPEAKER
LOW CH SPEAKER
JK1001 JK1000
SOLDER SIDE
PbF
CN5805
8 1
25 1
26 2
FP8501
A DVD MODULE P.C.B
SOLDER SIDE
FP8101
1
50
FP8201
6 . . 1
PbF
TO SPINDLE MOTOR

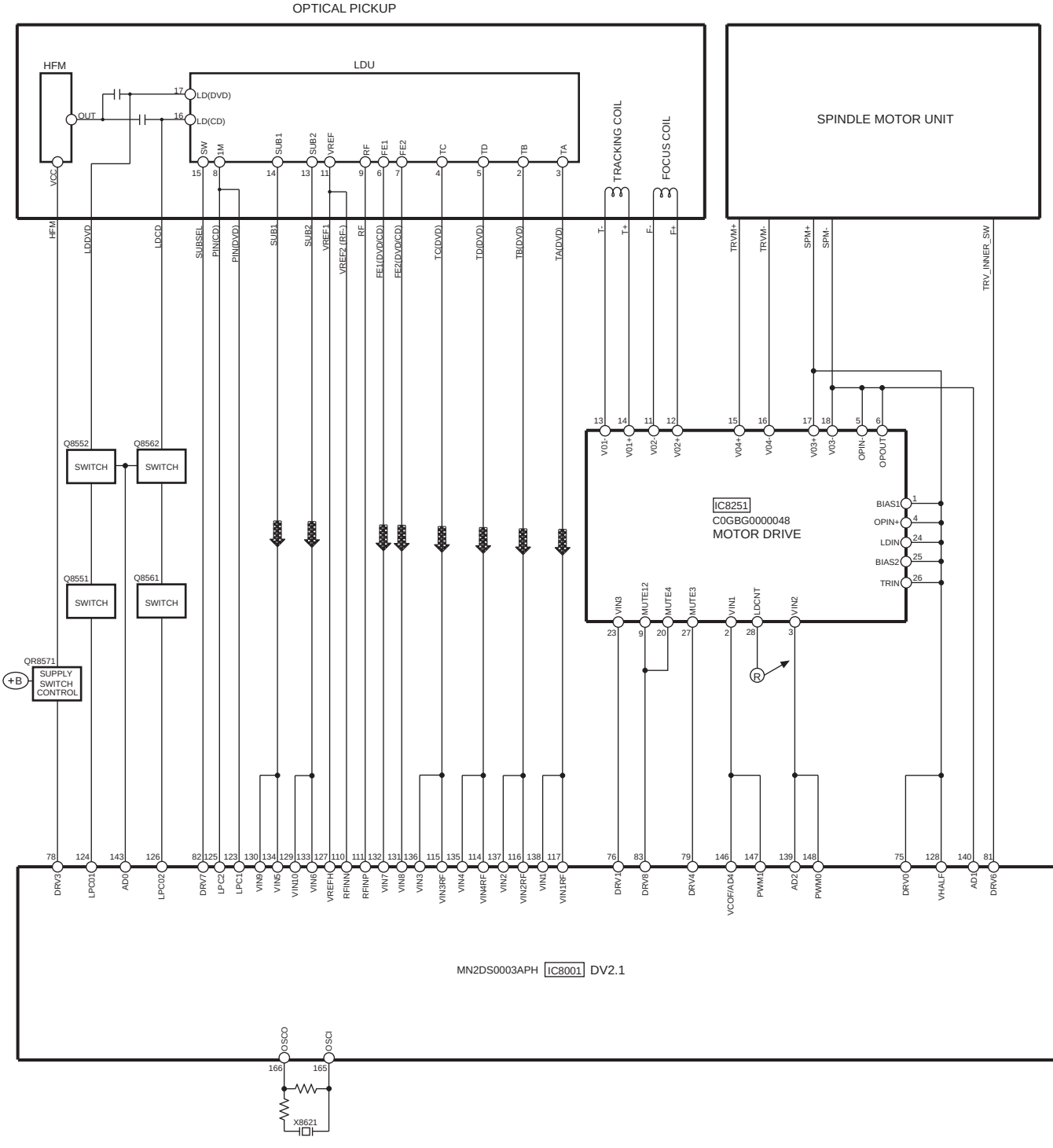
OPTICAL PICKUP
HFM
OUT
VCC
LDU
LD(DVD)
LD(CD)
SW
1M
SUB1
SUB2
VREF
RF
FE1
FE2
TC
TD
TB
TA
TRACKING COIL
FOCUS COIL
SPINDLE MOTOR UNIT
HFM
LDDVD
LDCD
SUBSEL
PIN(CD)
PIN(DVD)
SUB1
SUB2
VREF1
VREF2 (RF-)
RF
FE1(DVD/CD)
FE2(DVD/CD)
TC(DVD)
TD(DVD)
TB(DVD)
TA(DVD)
T-
T+
F-
F+
TRVM+
TRVM-
SPM+
SPM-
TRV_INNER_SW
Q8552
Q8562
SWITCH
Q8551
Q8561
QR8571
+B
SUPPLY SWITCH CONTROL
V01-
V01+
V02-
V02+
V04+
V04-
V03+
V03-
OPIN-
OPOUT
IC8251
C0GBG0000048
MOTOR DRIVE
BIAS1
OPIN+
LDIN
BIAS2
TRIN
VIN3
MUTE12
MUTE4
MUTE3
VIN1
LDCNT
VIN2
DRV3
LPC01
AD0
LPC02
DRV7
LPC2
LPC1
VIN9
VIN5
VIN10
VIN6
VREFH
RFINN
RFINP
VIN7
VIN8
VIN3
VIN3RF
VIN4
VIN4RF
VIN2
VIN2RF
VIN1
VIN1RF
DRV1
DRV8
DRV4
VCOF/AD4
PWM1
AD2
PWM0
DRV0
VHALF
AD1
DRV6
MN2DS0003APH
IC8001
DV2.1
OSCO
OSCI
X8621

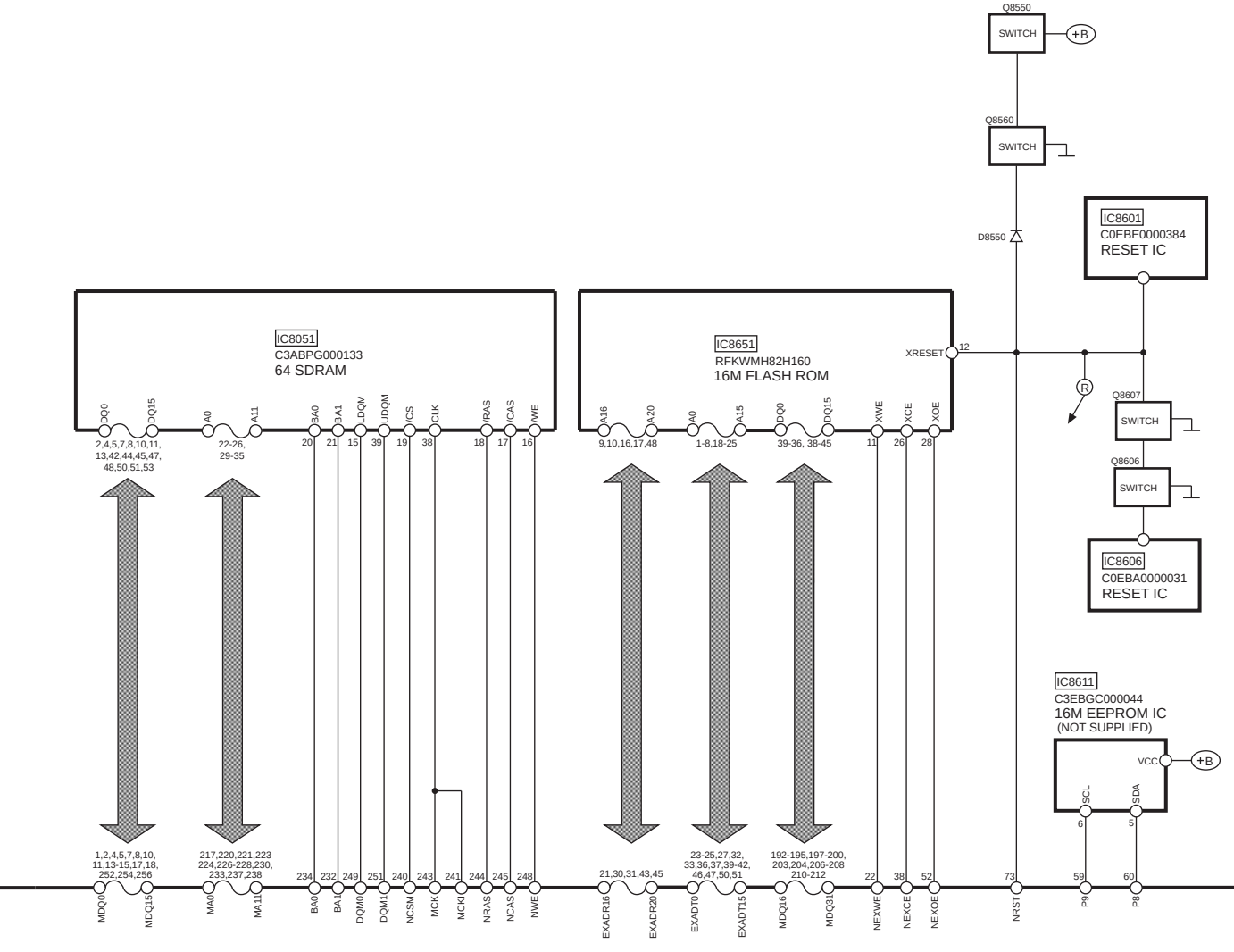

MN2DS0003APH IC8001 DV2.1

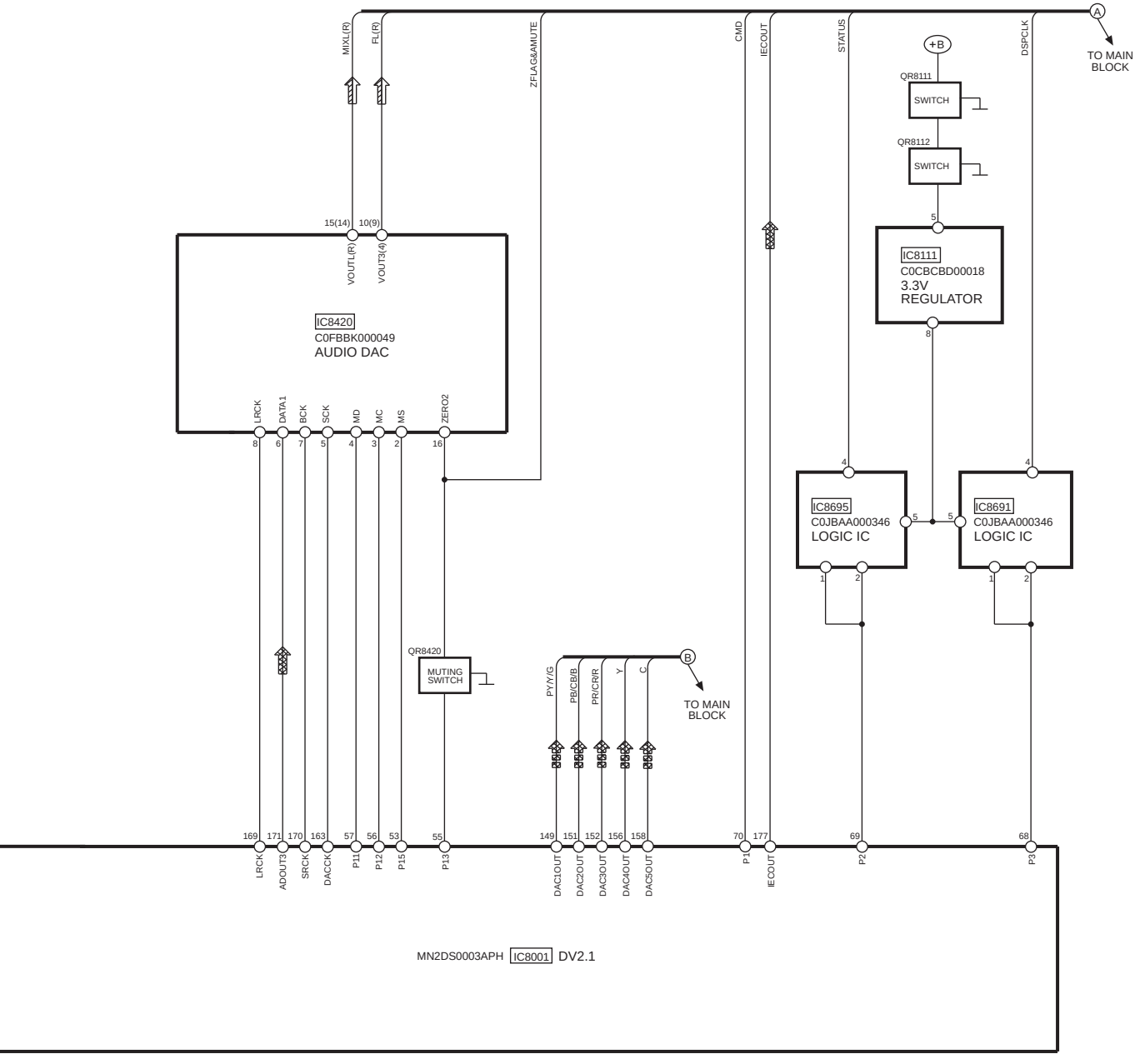
MIXL(R)
FL(R)
ZFLAG&AMUTE
CMD
IECOUT
STATUS
DSPCLK
A
TO MAIN BLOCK
+B
QR8111
SWITCH
QR8112
SWITCH
5
IC8111
C0CBCBD00018
3.3V REGULATOR
8
15(14)
10(9)
VOUTL(R)
VOUT3(4)
IC8420
C0FBBK000049
AUDIO DAC
LRCK
DATA1
BCK
SCK
MD
MC
MS
ZERO2
8
6
7
5
4
3
2
16
4
IC8695
C0JBAA000346
LOGIC IC
5
5
IC8691
C0JBAA000346
LOGIC IC
4
1
2
1
2
QR8420
MUTING SWITCH
PY/Y/G
PB/CB/B
PR/CR/R
Y
C
B
TO MAIN BLOCK
169
171
170
163
57
56
53
55
149
151
152
156
158
70
177
69
68
LRCK
ADOUT3
SRCK
DACCK
P11
P12
P15
P13
DAC1OUT
DAC2OUT
DAC3OUT
DAC4OUT
DAC5OUT
P1
IECOUT
P2
P3
MN2DS0003APH IC8001 DV2.1

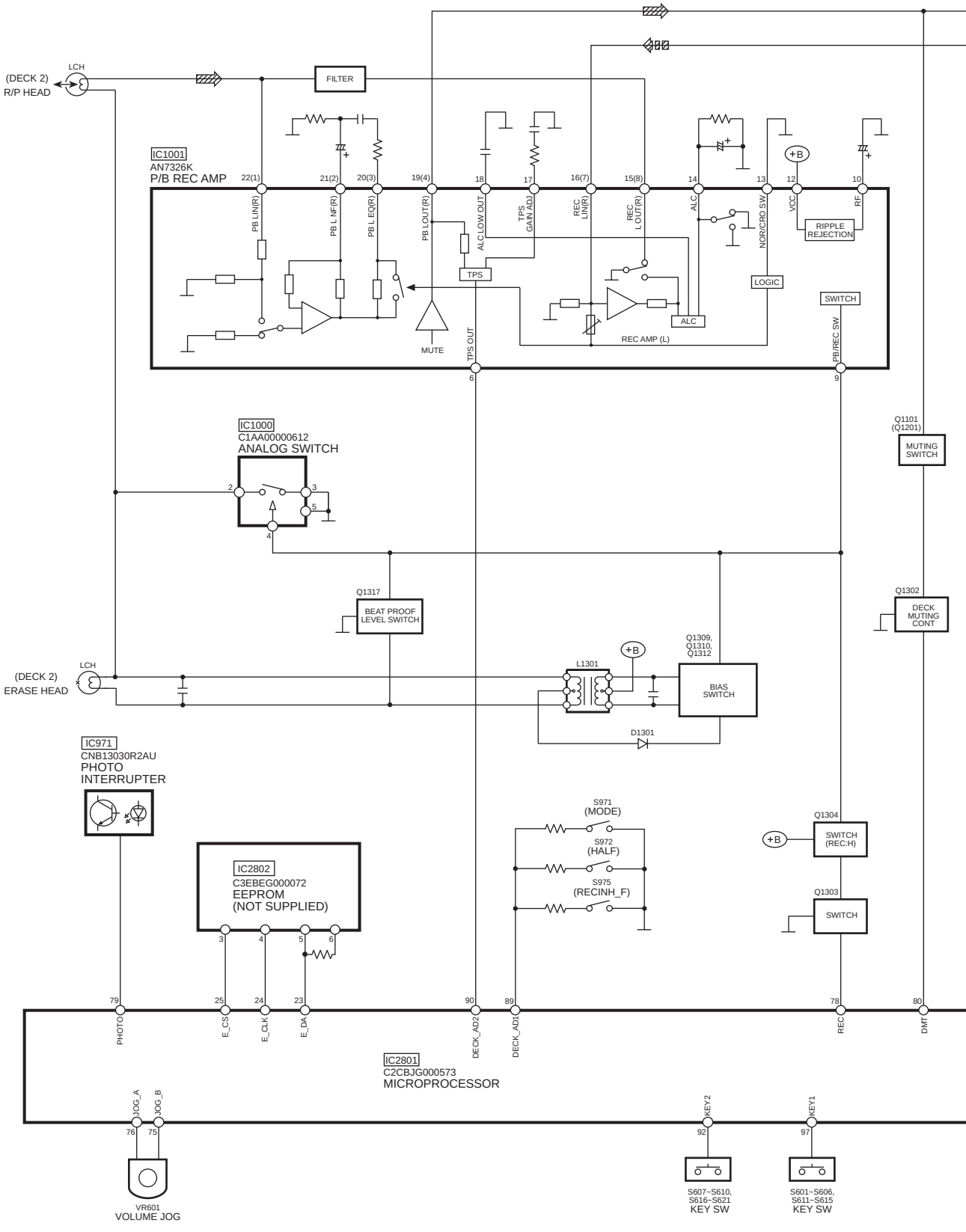
(DECK 2)
R/P HEAD
LCH
FILTER
IC1001
AN7326K
P/B REC AMP
22(1)
21(2)
20(3)
19(4)
18
17
16(7)
15(8)
14
13
12
10
PB LIN(R)
PB L NF(R)
PB L EQ(R)
PB L OUT(R)
ALC LOW OUT
TPS GAIN ADJ
REC LIN(R)
REC L OUT(R)
ALC
NOR/CRO SW
VCC
RF
+B
RIPPLE REJECTION
TPS
LOGIC
SWITCH
ALC
REC AMP (L)
MUTE
TPS OUT
PB/REC SW
6
9
IC1000
C1AA00000612
ANALOG SWITCH
2
3
5
4
Q1101
(Q1201)
MUTING SWITCH
Q1317
BEAT PROOF LEVEL SWITCH
Q1302
DECK MUTING CONT
Q1309,
Q1310,
Q1312
BIAS SWITCH
L1301
D1301
(DECK 2)
ERASE HEAD
IC971
CNB13030R2AU
PHOTO INTERRUPTER
S971
(MODE)
S972
(HALF)
S975
(RECINH_F)
Q1304
SWITCH (REC:H)
Q1303
SWITCH
IC2802
C3EBEG000072
EEPROM
(NOT SUPPLIED)
3
4
5
6
79
25
24
23
90
89
78
80
PHOTO
E_CS
E_CLK
E_DA
DECK_AD2
DECK_AD1
REC
DMT
IC2801
C2CBJG000573
MICROPROCESSOR
JOG_A
JOG_B
76
75
KEY2
KEY1
92
97
VR601
VOLUME JOG
S607~S610,
S616~S621
KEY SW
S601~S606,
S611~S615
KEY SW

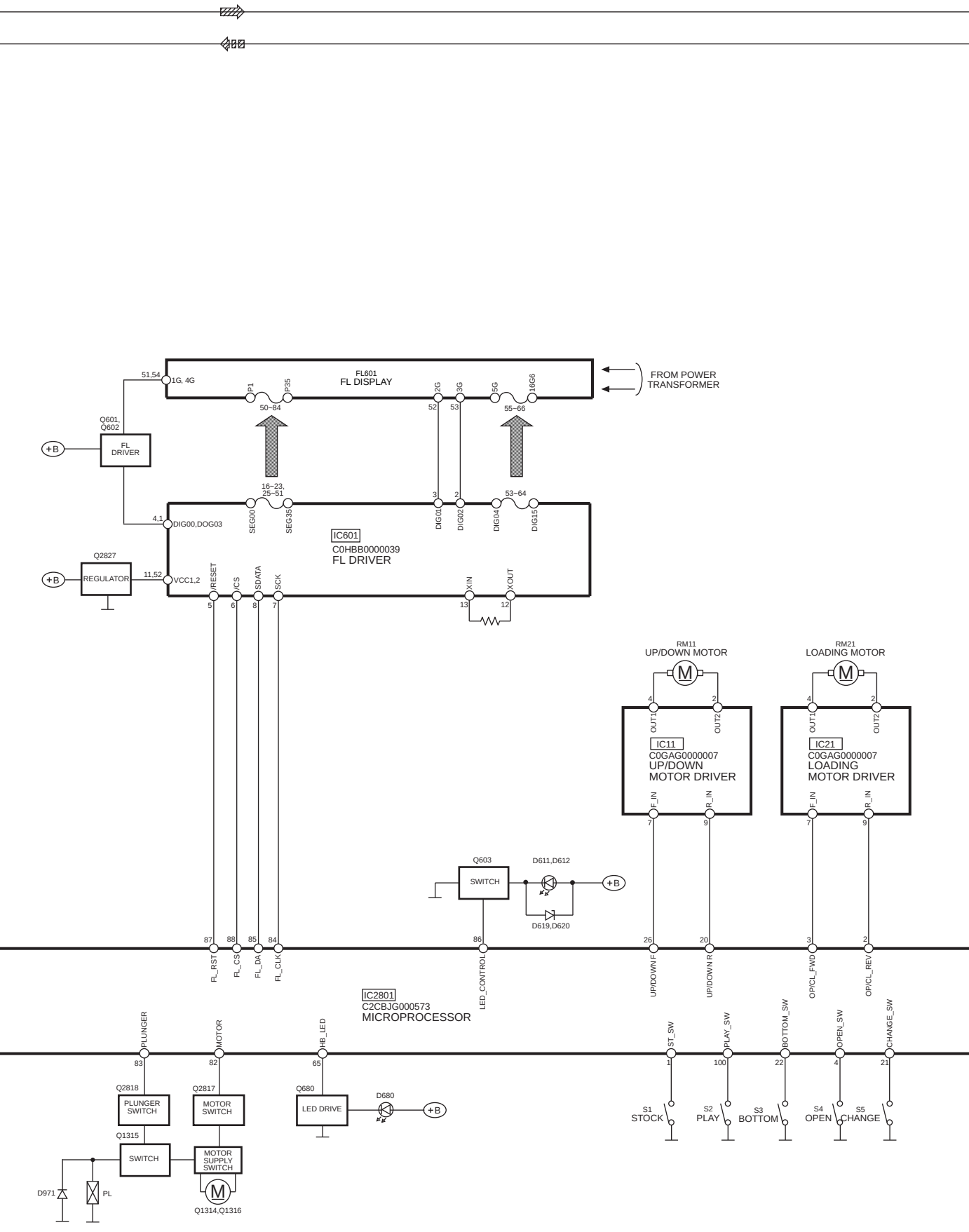
FL601
FL DISPLAY
FROM POWER TRANSFORMER
51,54
1G, 4G
P1
P35
50~84
2G
3G
5G
16G6
52
53
55~66
Q601, Q602
FL DRIVER
+B
16~23, 25~51
53~64
4,1
DIG00,DOG03
SEG00
SEG35
DIG01
DIG02
DIG04
DIG15
IC601
C0HBB0000039
FL DRIVER
Q2827
REGULATOR
11,52
VCC1,2
RESET
CS
SDATA
SCK
XIN
XOUT
RM11
UP/DOWN MOTOR
RM21
LOADING MOTOR
OUT1
OUT2
IC11
C0GAG0000007
UP/DOWN MOTOR DRIVER
IC21
C0GAG0000007
LOADING MOTOR DRIVER
F_IN
R_IN
Q603
SWITCH
D611,D612
D619,D620
FL_RST
FL_CS
FL_DA
FL_CLK
LED_CONTROL
UP/DOWN F
UP/DOWN R
OP/CL_FWD
OP/CL_REV
IC2801
C2CBJG000573
MICROPROCESSOR
PLUNGER
MOTOR
HB_LED
ST_SW
PLAY_SW
BOTTOM_SW
OPEN_SW
CHANGE_SW
Q2818
PLUNGER SWITCH
Q2817
MOTOR SWITCH
Q680
LED DRIVE
D680
Q1315
SWITCH
MOTOR SUPPLY SWITCH
D971
PL
Q1314,Q1316
S1
STOCK
S2
PLAY
S3
BOTTOM
S4
OPEN
S5
CHANGE

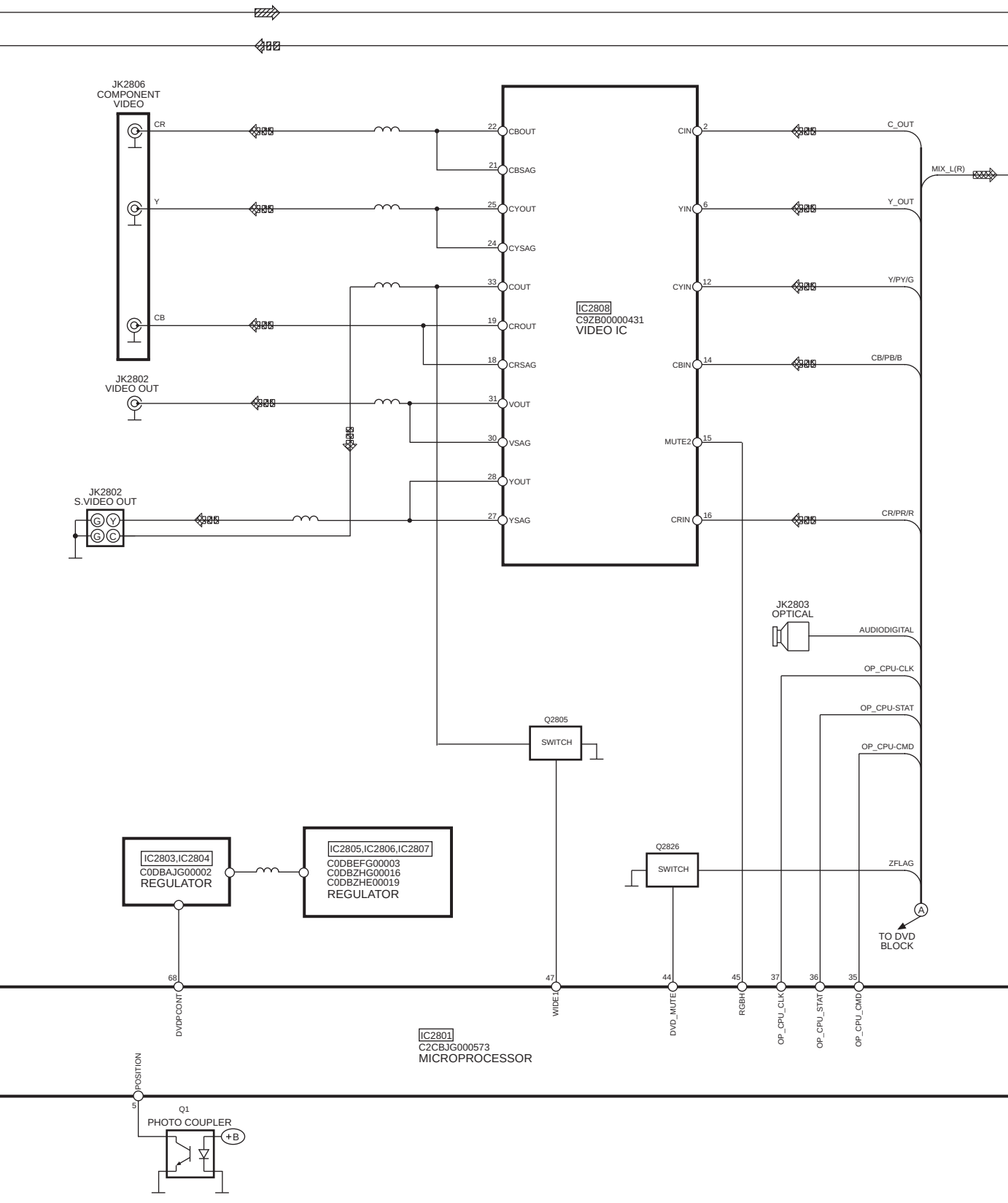
JK2806
COMPONENT
VIDEO
CR
Y
CB
JK2802
VIDEO OUT
JK2802
S.VIDEO OUT
G Y
G C
22 CBOUT
21 CBSAG
25 CYOUT
24 CYSAG
33 COUT
19 CROUT
18 CRSAG
31 VOUT
30 VSAG
28 YOUT
27 YSAG
IC2808
C9ZB00000431
VIDEO IC
CIN 2
YIN 6
CYIN 12
CBIN 14
MUTE2 15
CRIN 16
C_OUT
MIX_L(R)
Y_OUT
Y/PY/G
CB/PB/B
CR/PR/R
JK2803
OPTICAL
AUDIODIGITAL
OP_CPU-CLK
OP_CPU-STAT
OP_CPU-CMD
Q2805
SWITCH
IC2803,IC2804
C0DBAJG00002
REGULATOR
IC2805,IC2806,IC2807
C0DBEFG00003
C0DBZHG00016
C0DBZHE00019
REGULATOR
Q2826
SWITCH
ZFLAG
A
TO DVD
BLOCK
68
47
44
45
37
36
35
DVDPCONT
WIDE1
DVD_MUTE
RGBH
OP_CPU_CLK
OP_CPU_STAT
OP_CPU_CMD
IC2801
C2CBJG000573
MICROPROCESSOR
POSITION
5
Q1
PHOTO COUPLER
+B

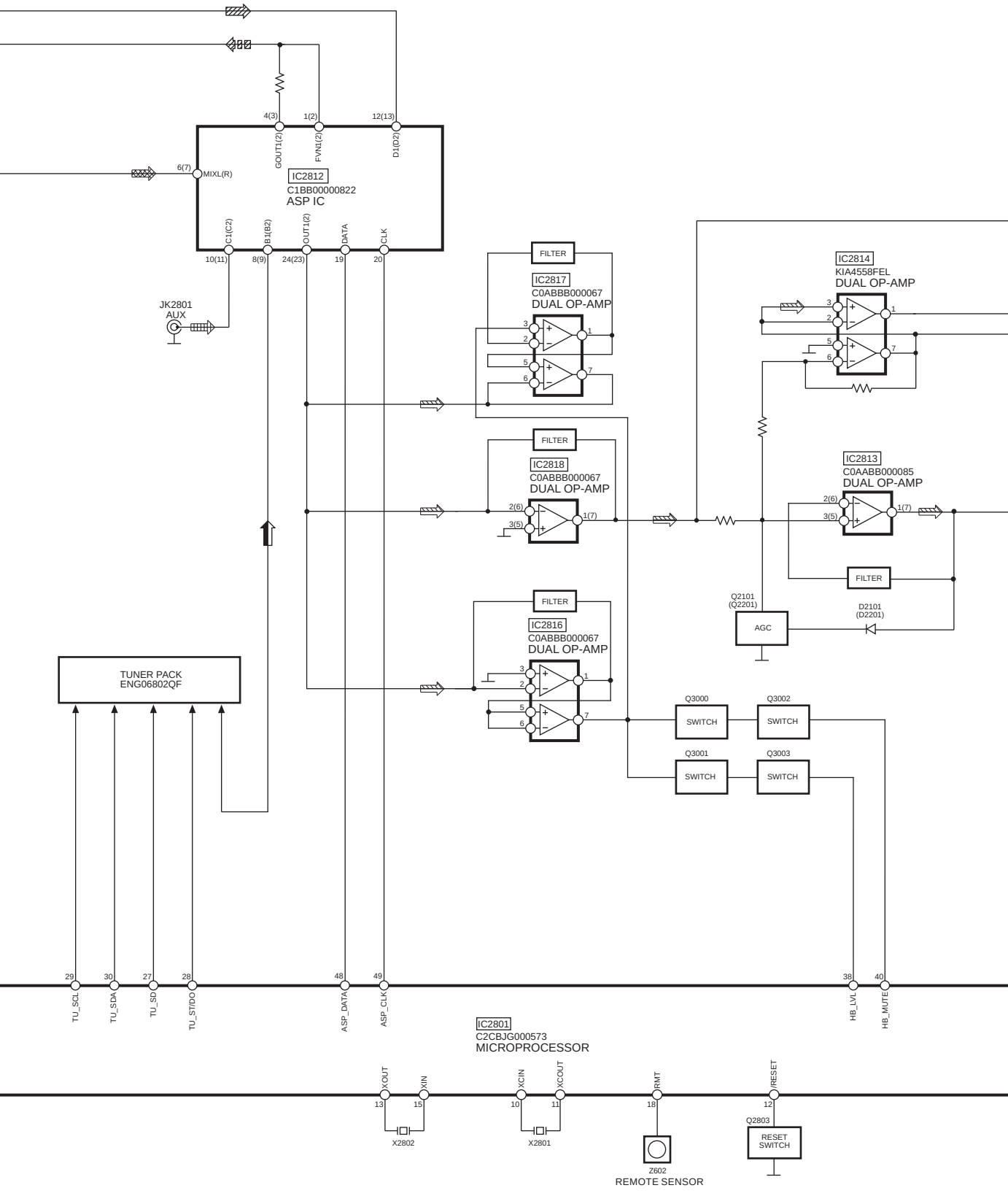
IC2812
C1BB00000822
ASP IC
4(3)
1(2)
12(13)
GOUT1(2)
FVN1(2)
D1(D2)
6(7)
MIXL(R)
C1(C2)
B1(B2)
OUT1(2)
DATA
CLK
10(11)
8(9)
24(23)
19
20
JK2801
AUX
FILTER
IC2817
C0ABBB000067
DUAL OP-AMP
IC2818
C0ABBB000067
DUAL OP-AMP
IC2816
C0ABBB000067
DUAL OP-AMP
IC2814
KIA4558FEL
DUAL OP-AMP
IC2813
C0AABB000085
DUAL OP-AMP
Q2101
(Q2201)
AGC
D2101
(D2201)
TUNER PACK
ENG06802QF
Q3000
SWITCH
Q3002
SWITCH
Q3001
SWITCH
Q3003
SWITCH
29
30
27
28
48
49
38
40
TU_SCL
TU_SDA
TU_SD
TU_ST/DO
ASP_DATA
ASP_CLK
HB_LVL
HB_MUTE
IC2801
C2CBJG000573
MICROPROCESSOR
XOUT
XIN
XCIN
XCOUT
RMT
/RESET
13
15
10
11
18
12
X2802
X2801
Z602
REMOTE SENSOR
Q2803
RESET
SWITCH

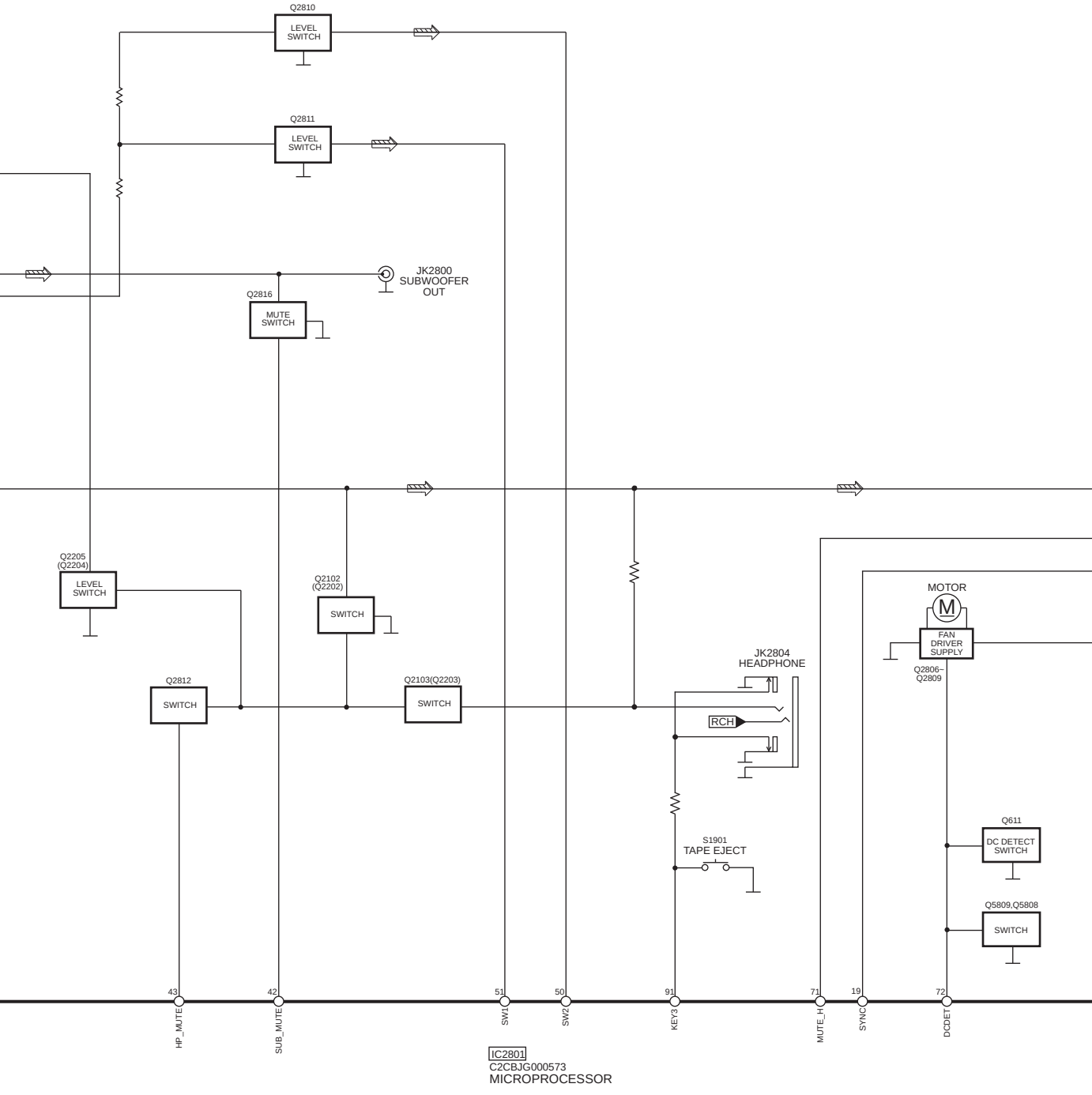
Q2810
LEVEL SWITCH
Q2811
LEVEL SWITCH
JK2800
SUBWOOFER OUT
Q2816
MUTE SWITCH
Q2205 (Q2204)
LEVEL SWITCH
Q2102 (Q2202)
SWITCH
Q2812
SWITCH
Q2103(Q2203)
SWITCH
JK2804
HEADPHONE
RCH
S1901
TAPE EJECT
MOTOR
M
FAN DRIVER SUPPLY
Q2806~ Q2809
Q611
DC DETECT SWITCH
Q5809,Q5808
SWITCH
43
42
51
50
91
71
19
72
HP_MUTE
SUB_MUTE
SW1
SW2
KEY3
MUTE_H
SYNC
DCDET
IC2801
C2CBJG000573
MICROPROCESSOR

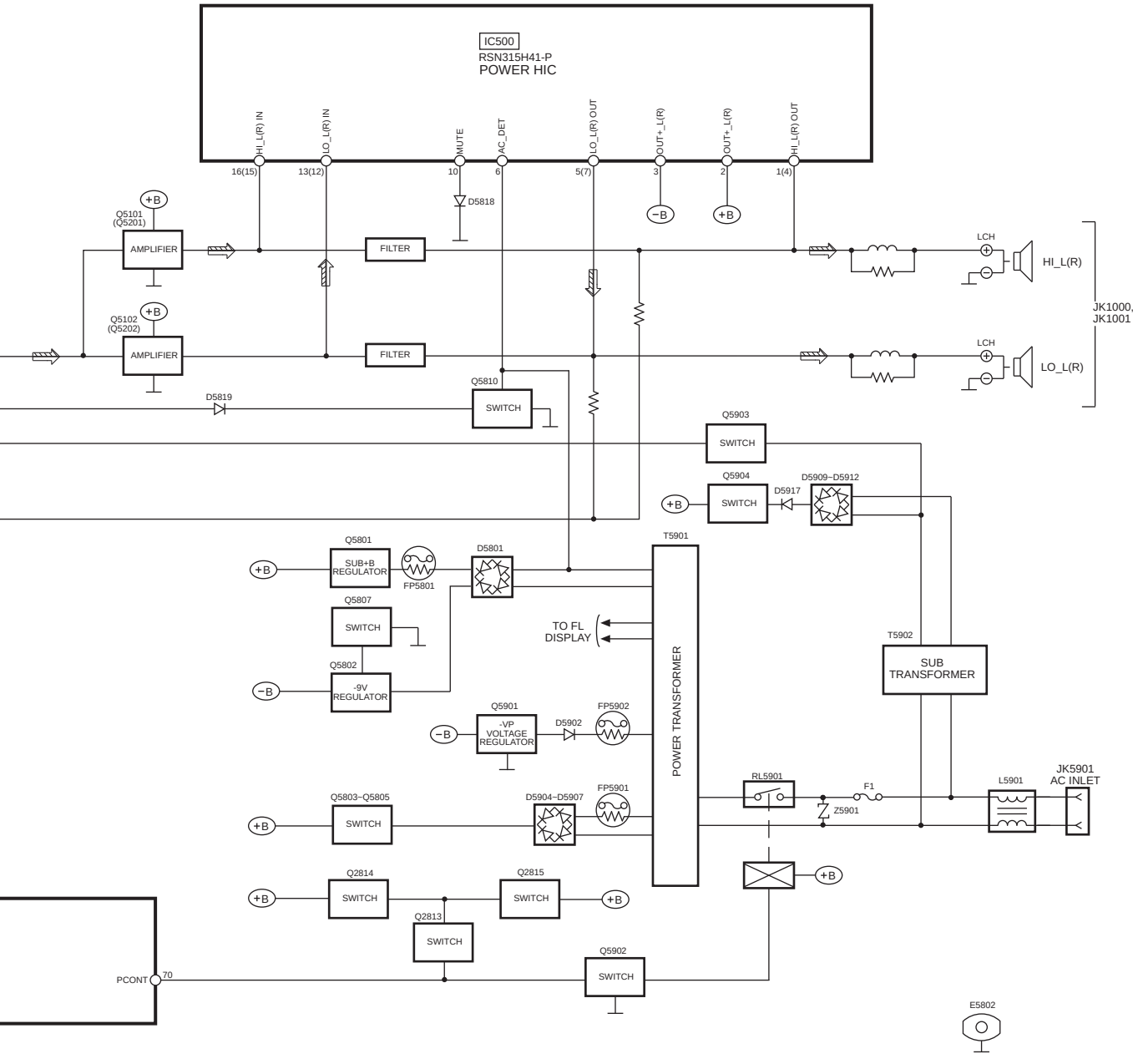

SIGNAL LINES

: MAIN SIGNAL LINE	: CD-DA SIGNAL LINE	: TAPE PLAYBACK SIGNAL LINE	: DVD (AUDIO) SIGNAL LINE
: FM/AM SIGNAL LINE	: AUX SIGNAL LINE	: TAPE RECORD SIGNAL LINE	: DVD (VIDEO) SIGNAL LINE

( ) Indicates Pin No. of Right Channel

Note : Signal Lines are applicable to the Left Channel only.

KIA4558FEL (8P)
C9ZB00000431 (34P)
C0FBBK000049 (16P)
C3ABPG000133 (54P)
C1BB00000822 (40P)

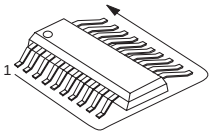

C0AABB000085

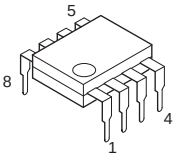

C0HBB0000039 (64P)
MN2DS0003APH (256P)
C2CBJG000573 (100P)

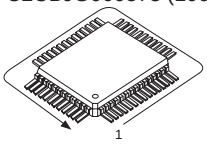

AN7326K (22P)

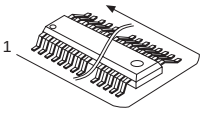

RFKWMH82H160

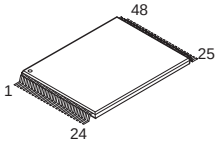

C0EBA0000031
C0JBAA000346

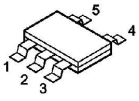

C0DBEFG00003
C0DBZHG00016

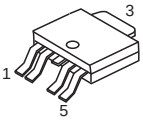

C0GBG0000048 (28P)

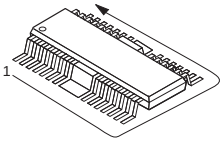

C0DBZHE00019
C0DBAJG00002

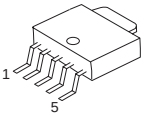

C0GAG0000007

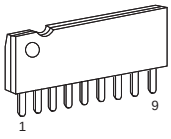

C0EBE0000384

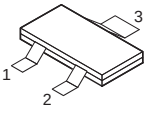

C1AA00000612

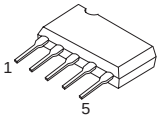

C0CBCBD00018

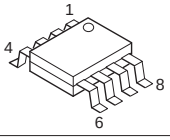

CNB13030R2AU

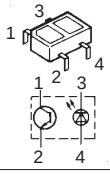

C0ABBB000067

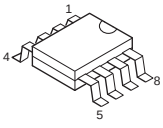

RSN315H41-P (18P)

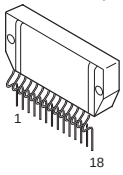

KTC2026
B1BCCG000023

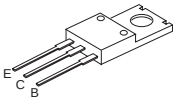

2SB0621AHA

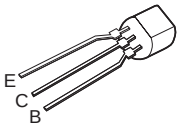

B1CABA000002

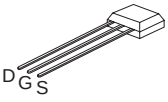

KRC119STA
2SB09700RL
B1ABGC000005
B1GBCFGH0001
B1GDCFJJ0002
B1ABCF000011
B1ADHG000003
B1ABDF000018
B1GBCFJN0033
B1ABCE000016

B1GDCFGH0002
B1GBCFLL0037
B1GBCFJJ0051
B1GBCFGG0023
B1GDCFGG0026
UNR521400L
B1GBCFJJ0047
B1GDCFEC0001
UNR221200L

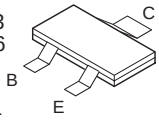

2SD09650RA
KTA12710YTA
KTA1504GRTA
KTC32030YTA

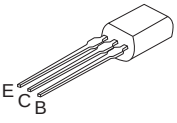

B1AAGC000006
B1AAGC000007

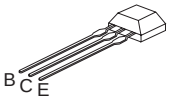

KTC3199GRTA
KRC102MTA
KRA110MTA
B1ACCF000039
B1GCCFJJ0016

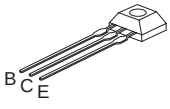

2SD21370PA

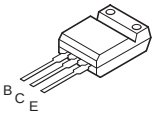

B3NAA0000098

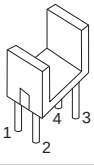

B0EAKM000117

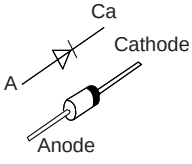

MA2J11100L
B0ACCK000005
B0ACCE000003
MA2J72800L

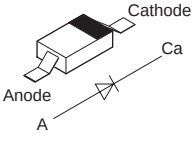

B0JCPC000004
B0JACE000003

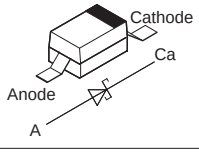

B0BC6R100010
B0BC8R100004
B0BC7R500001
B0BC5R600003

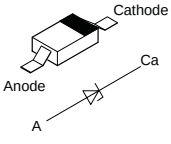

B0BA9R600002
B0BA6R600008
B0BA03100002
MTZJ15BTA

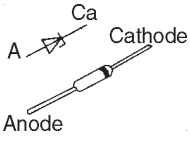

B0AACK000004
MA2C16500E

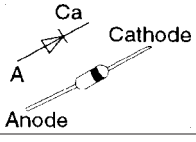

B3AEA0000058
B3ACA0000261

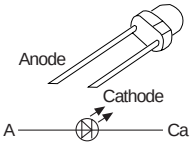

B3AAA0000487

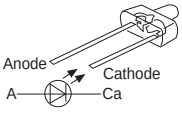

B0FBAM000009

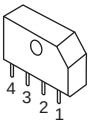

Discs that can be played

Disc	Logo	Indication in these operating instructions	Remarks	
DVD-RAM	DVD RAM RAM4.7	RAM	Recorded using Version 1.1 of the Video Recording Format (a unified video recording standard).	• Recorded with DVD-Video recorders, DVD-Video cameras, personal computers, etc. • Remove discs from their cartridges before use.
		JPEG	Recorded using the DCF (Design rule for Camera File system) standard.	• Recorded with Panasonic DVD-Video recorders. • To play JPEG files, select “Play as Data Disc” in Other Menu.
DVD-Audio	DVD AUDIO	DVD-A	—	
		DVD-V	Some DVD-Audio discs contain DVD-Video content. To play DVD-Video content, select “Play as DVD-Video” in Other Menu.	
DVD-Video	DVD VIDEO DVD VIDEO	DVD-V	—	
DVD-R/ DVD-RW	DVD R R4.7 DVD RW		Discs recorded and finalized[1] on a DVD-Video recorder or DVD-Video camera are played as DVD-Video on this unit.	
+R (Video)/ +RW (Video)	—	DVD-V	Discs recorded and finalized[1] on a DVD-Video recorder or DVD-Video camera are played as DVD-Video on this unit. • Note that you cannot use some of the features described in these instructions with these discs, and some information may not be displayed correctly. This is due to the disc format and does not indicate a malfunction.	
Video CD	COMPACT disc DIGITAL VIDEO	VCD	—	
SVCD	COMPACT disc SUPER VIDEO		Conforming to IEC62107.	
CD	COMPACT disc DIGITAL AUDIO COMPACT disc DIGITAL AUDIO TEXT	CD	This unit is compatible with HDCD, but does not support Peak Extend function (A function which expands the dynamic range of high level signals). HDCD-encoded CDs sound better because they are encoded with 20 bits, compared with 16 bits for all other CDs. • During HDCD play, "HDCD" appears on the unit’s display.	
CD-R CD-RW	—	WMA MP3 JPEG CD VCD	• This unit can play CD-R/RW (audio recording disc) recorded with the formats on the left. Close the session or finalize[1] the disc after recording. • **HighMAT discs** WMA, MP3 or JPEG files only. To play without using the HighMAT function, select "Play as Data Disc" in Other Menu.	

[1]A process that allows play on compatible equipment.

- It may not be possible to play the above discs in all cases due to the type of disc or condition of the recording.

■ Discs that cannot be played

DVD-ROM, CD-ROM, CDV, CD-G, SACD, Divx Video Discs and Photo CD, DVD-RAM that cannot be removed from its cartridge, 2.6-GB and 5.2-GB DVD-RAM, and “Chaoji VCD” available on the market including CVD, DVCD and SVCD that do not conform to IEC62107.

Playing DVDs and Video CDs

The producer of these discs can control how they are played so you may not always be able to control play as described in these operating instructions (for example if the play time is not displayed or if a Video CD has menus). Read the disc’s instructions carefully.

■ Video systems

– This unit can play PAL and NTSC, but your television must match the system used on the disc.
– PAL discs cannot be correctly viewed on an NTSC television.
– This unit can convert NTSC signals to PAL 60 for viewing on a PAL television.

Tips for making WMA/MP3, CD text and JPEG discs

- Discs must conform to ISO9660 level 1 or 2 (except for extended formats).
- This unit is compatible with multi-session but if there are a lot of sessions it takes more time for play to start. Keep the number of sessions to a minimum to avoid this.
- The order in which the tracks appear in the menus may differ from the order shown on your computer.

Naming folders and files

At the time of recording, prefix folder and file names with 3-digit numbers in the order you want to play them (this may not work at times).

Files must have the extension:
".WMA" or ".wma"
".MP3" or ".mp3"
".JPG", ".jpg", ".JPEG" or ".jpeg"

Example: MP3

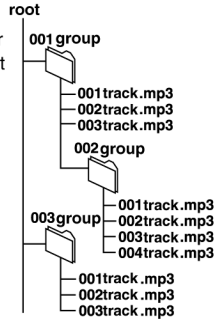

WMA

- Noise may occur when playing WMA files.
- You cannot play WMA files that are copy protected.

MP3

- This unit is not compatible with ID3 tags.
- If you play an MP3 track that includes still picture data, it will take some time before the music itself starts playing and the elapsed time will not be displayed during this time. Even after the track starts, the correct play time will not be displayed.

JPEG

- To view JPEG files on this unit:
  —Take them on a digital camera that meets the DCF (Design rule for Camera File System) standard. Some digital cameras have functions that are not supported by the DCF standard like automatic picture rotation which may render a picture unviewable.
  —Do not alter the files in any way or save them under a different name.
- This unit cannot display moving pictures, Motion JPEG and other such formats, still pictures other than JPEG (i.e. TIFF) or play associated sound.

CD (CD text only)

When making your own CD text discs

The unit plays the tracks in the order you record them so you do not have to prefix the titles with numbers.

HIGH MAT AUDIO•IMAGE

HighMAT and the HighMAT logo are either trademarks or registered trademarks of Microsoft Corporation in the United States and/or other countries.

MPEG Layer-3 audio decoding technology licensed from Fraunhofer IIS and Thomson multimedia.

Windows Media, and the Windows logo are trademarks, or registered trademarks of Microsoft Corporation in the United States and/or other countries.

WMA is a compression format developed by Microsoft Corporation. It achieves the same sound quality as MP3 with a file size that is smaller than that of MP3.

Designed for Windows Media™

Manufactured under license from Dolby Laboratories.
"Dolby" and the double-D symbol are trademarks of Dolby Laboratories.

"DTS" and "DTS 2.0 + Digital Out" are trademarks of Digital Theater Systems, Inc.

HDCD® ,HDCD®, High Definition Compatible Digital® and Pacific Microsonics™ are either registered trademarks or trademarks of Pacific Microsonics, Inc. in the United States and/or other countries.

HDCD system manufactured under license from Pacific Microsonics, Inc. This product is covered by one or more of the following: In the USA: 5,479,168, 5,638,074, 5,640,161, 5,808,574, 5,838,274, 5,854,600, 5,864,311, 5,872,531, and in Australia: 669114, with other patents pending.

This product incorporates copyright protection technology that is protected by method claims of certain U.S. patents and other intellectual property rights owned by Macrovision Corporation and other rights owners. Use of this copyright protection technology must be authorized by Macrovision Corporation, and is intended for home and other limited viewing uses only unless otherwise authorized by Macrovision Corporation. Reverse engineering or disassembly is prohibited.

Main unit

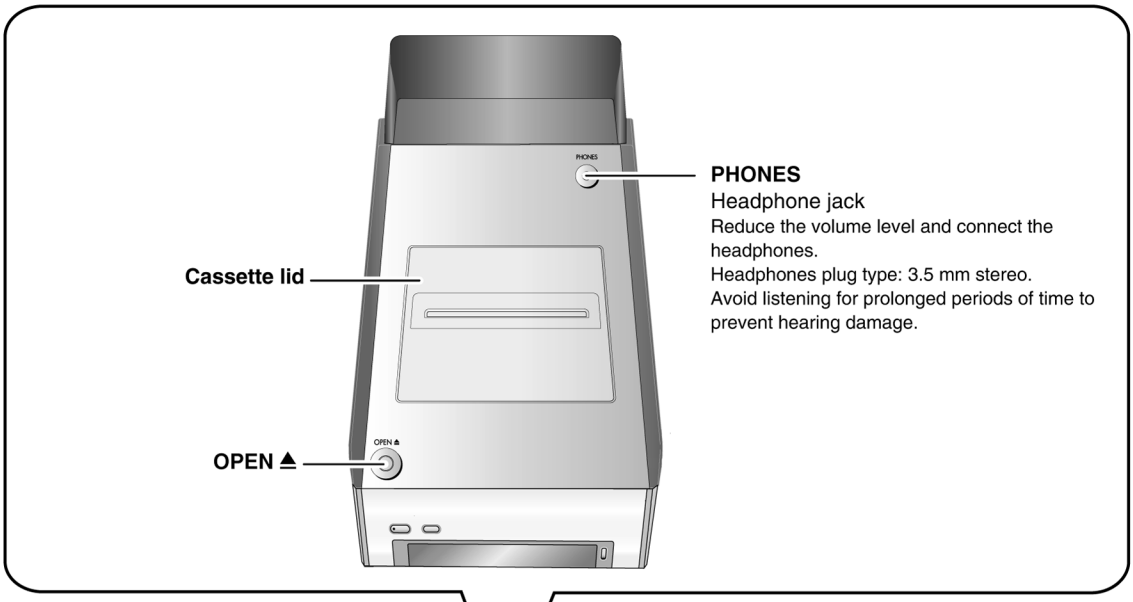

PHONES
Headphone jack
Reduce the volume level and connect the headphones.
Headphones plug type: 3.5 mm stereo.
Avoid listening for prolonged periods of time to prevent hearing damage.

AC IN (AC supply indicator)
This indicator lights when the unit is connected to the AC mains supply.

⏻/I (standby/on switch)
Press to switch the unit from on to standby mode or vice versa.
In standby mode, the unit is still consuming a small amount of power.

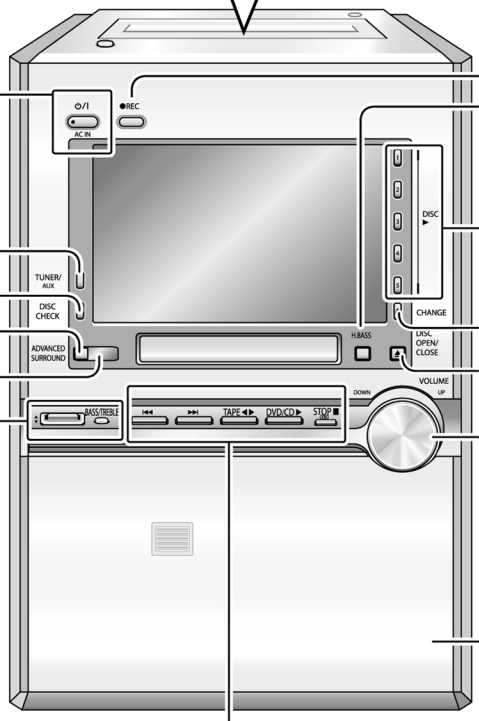

●REC

H.BASS

1– 5 (disc direct play buttons)

⏏, CHANGE

⏏, DISC OPEN/CLOSE

VOLUME, UP, DOWN

Disc trays

TUNER/AUX

DISC CHECK

ADVANCED SURROUND

Remote control sensor

EQ jog, BASS/TREBLE

⏮ ⏭ (time adjust, disc skip, radio channel select, tape fast-forward/rewind/ TPS)

TAPE ▶

DVD/CD ▶

STOP ■, –DEMO

Remote control

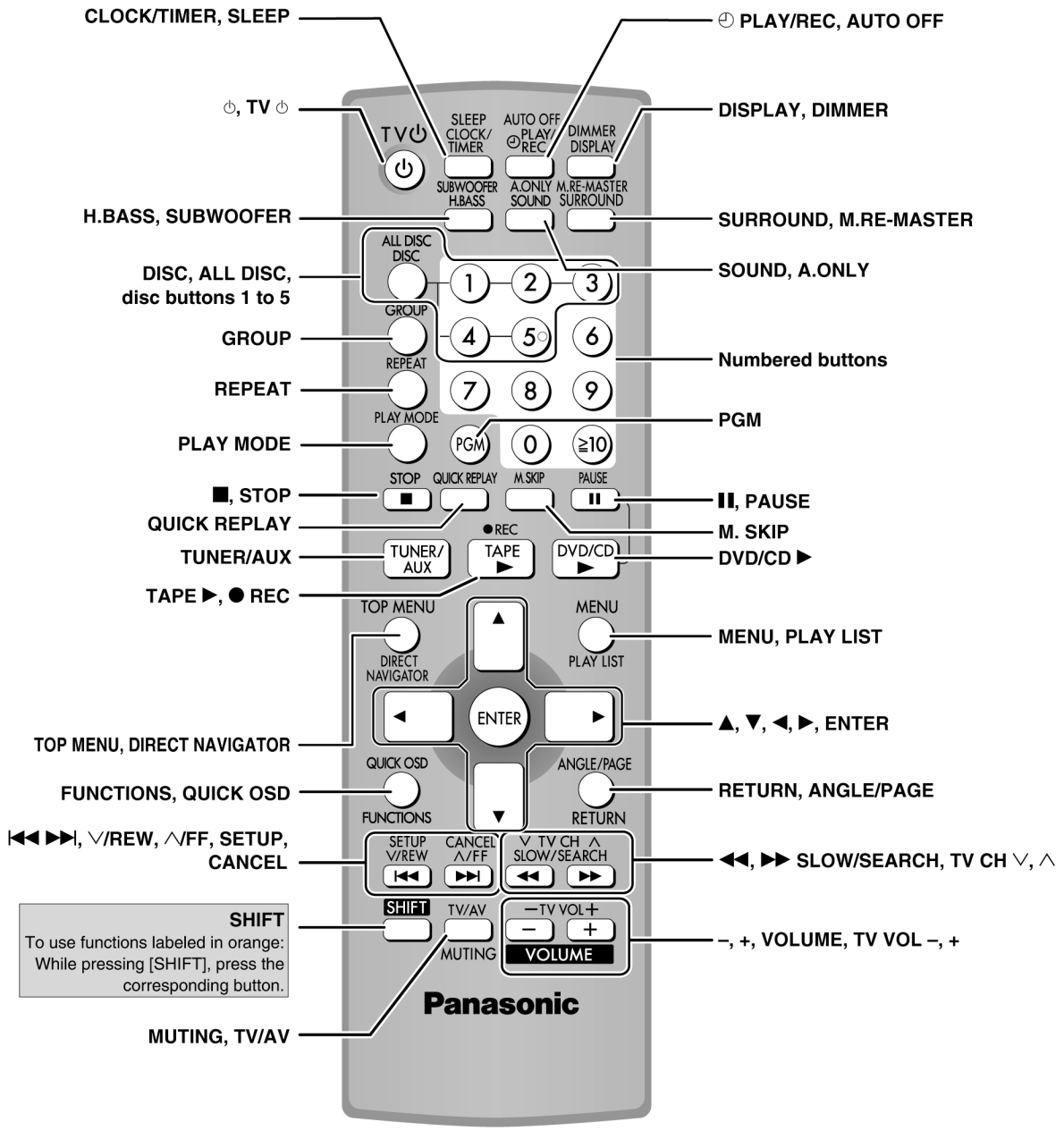

J COMPONENT VIDEO P.C.B (REPV0054F)

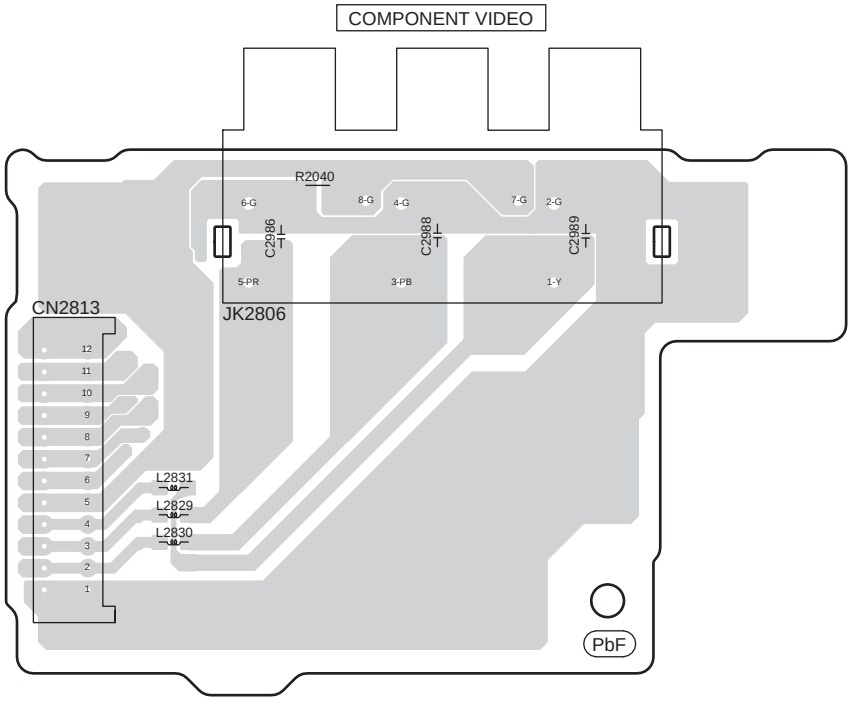

K HARMONIC BASS P.C.B (REPV0053A)

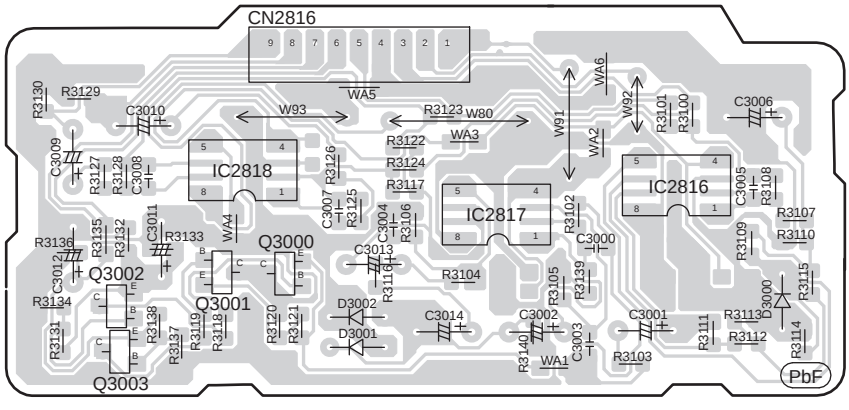

G DECK MECHANISM P.C.B (REPX0321H)

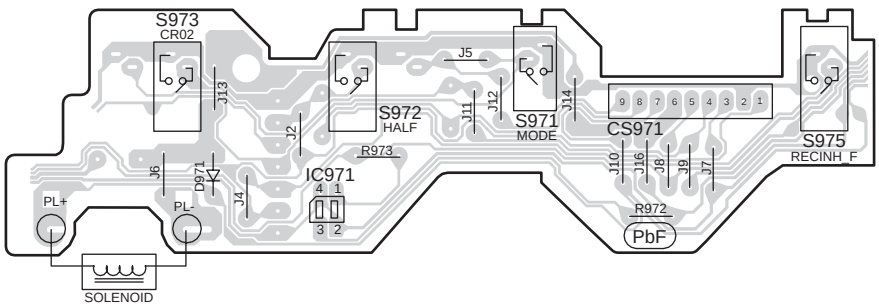

I CD LOADING P.C.B (REP3569A)

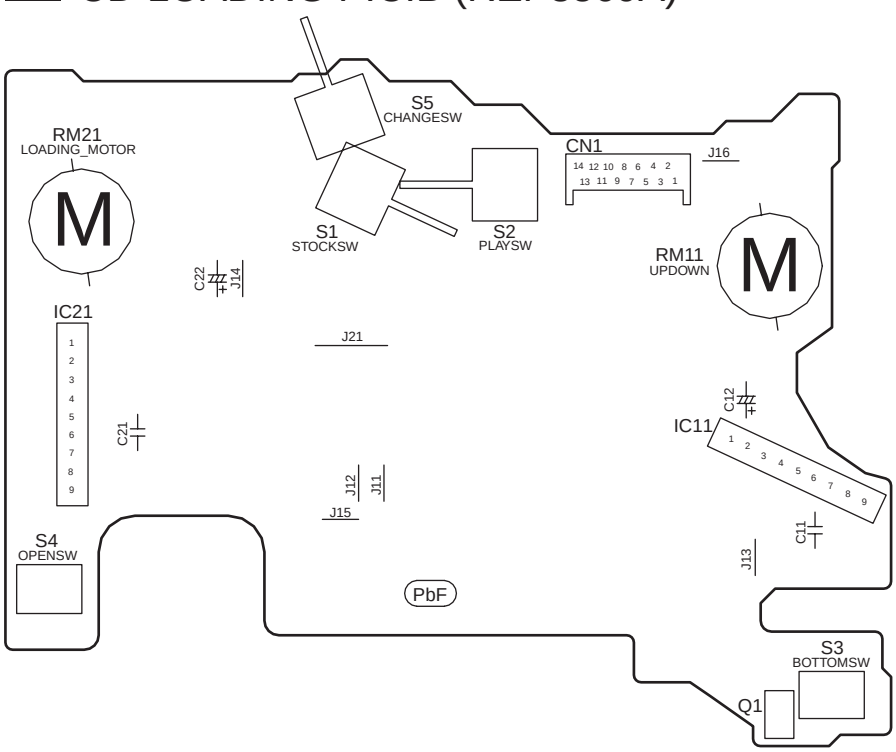

F DECK P.C.B (REPX0411E)

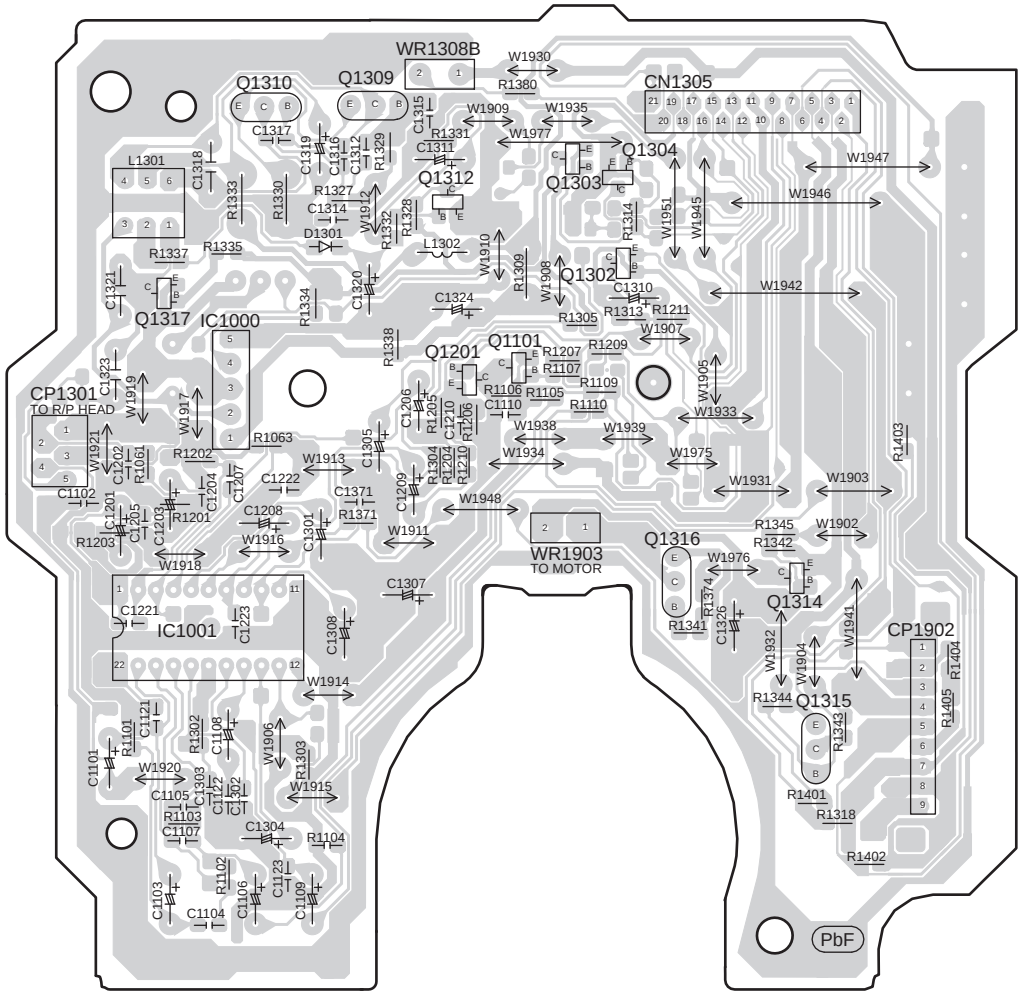
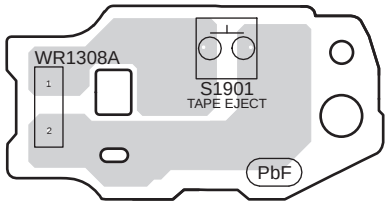
H TAPE EJECT P.C.B (REPX0411E)